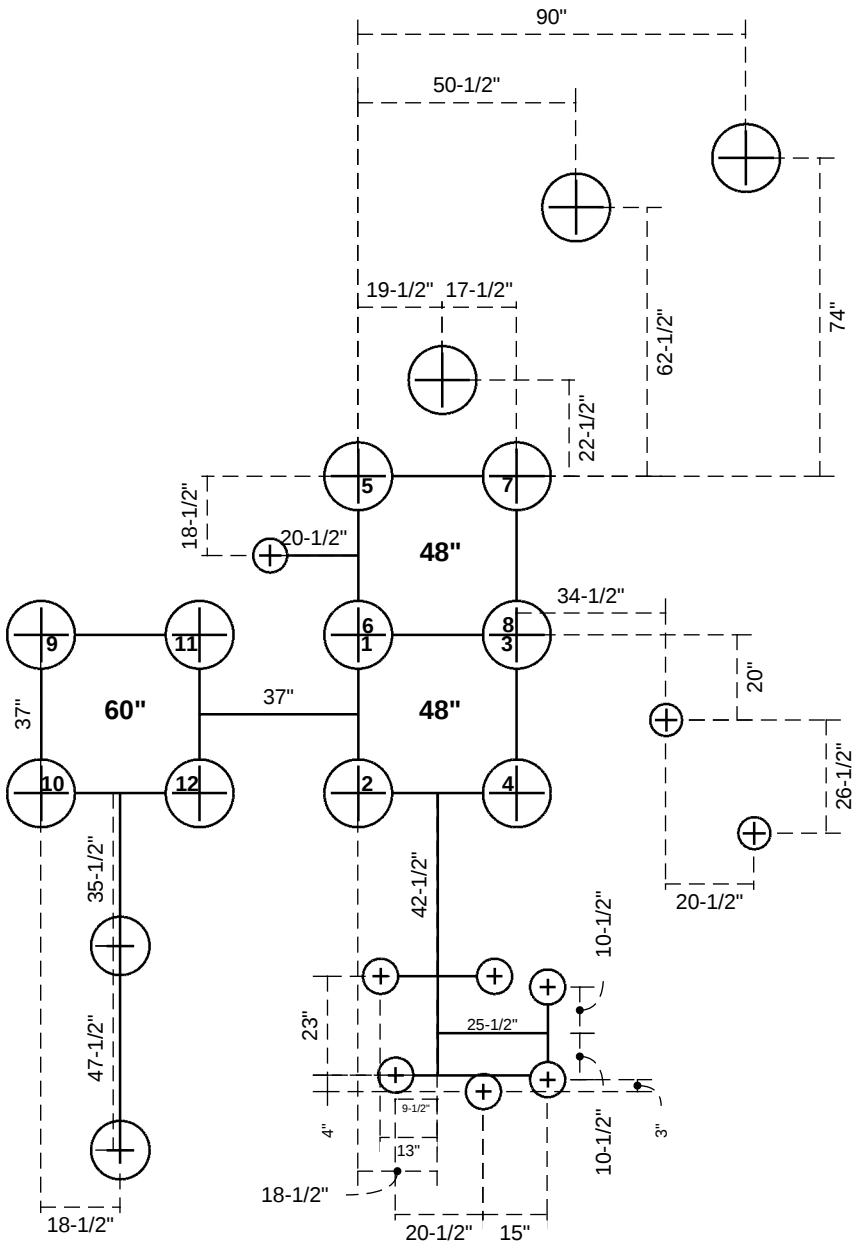

Footer Layout provided as a guide. Measurements rounded to nearest 1/2 inch. For true accuracy, please measure using equipment onsite. Equipment dimensions are subject to change without notice.

160627-B-5-6-CR001

October 27, 2021

Footer and Post Layout