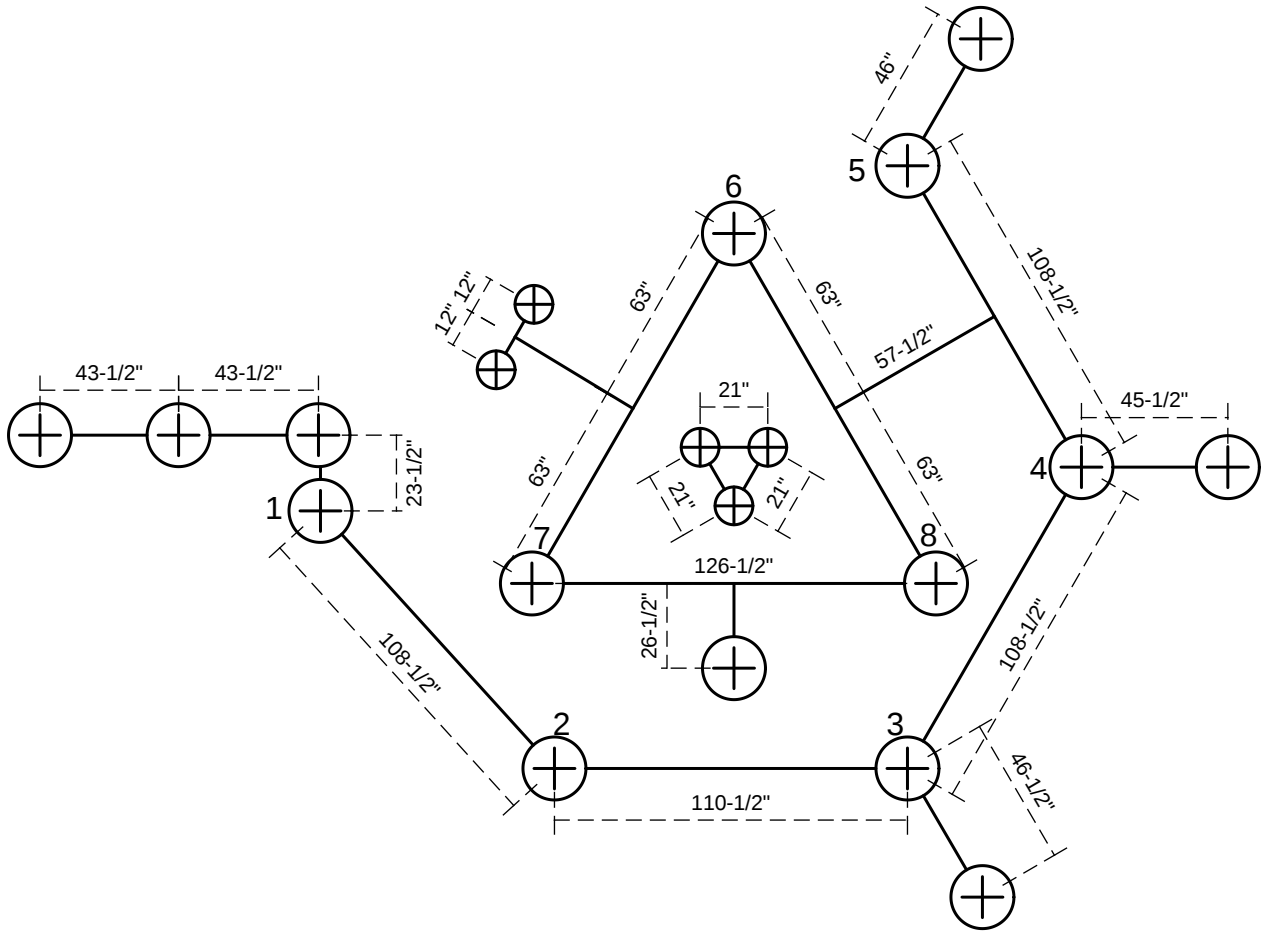

Footer Layout provided as a guide. Measurements rounded to nearest 1/2 inch. For true accuracy, please measure using equipment onsite. Equipment dimensions are subject to change without notice.

150105CR-RP-23701

August 1, 2017

Footer and Post Layout