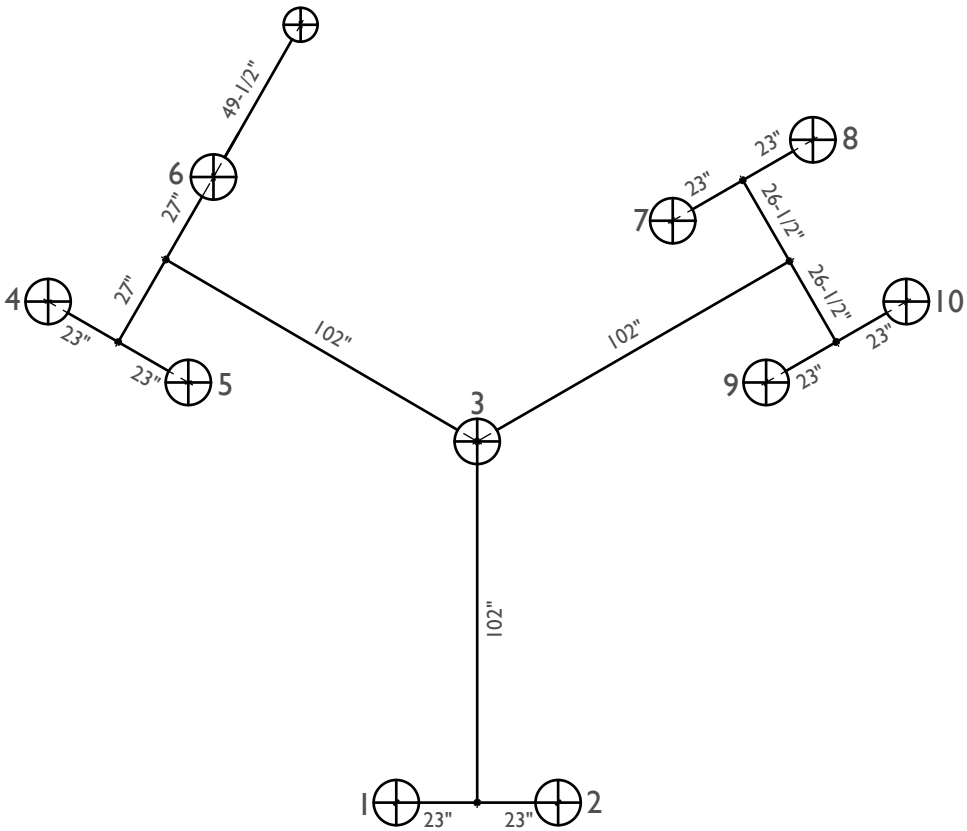

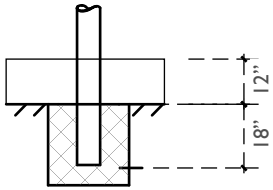

Footer Layout provided as a guide. Measurements rounded to nearest 1/2 inch. For true accuracy, please measure using equipment onsite. Equipment dimensions are subject to change without notice.

150110B-H-12

August 16, 2016 ::

Footer and Post Layout