Red Bud

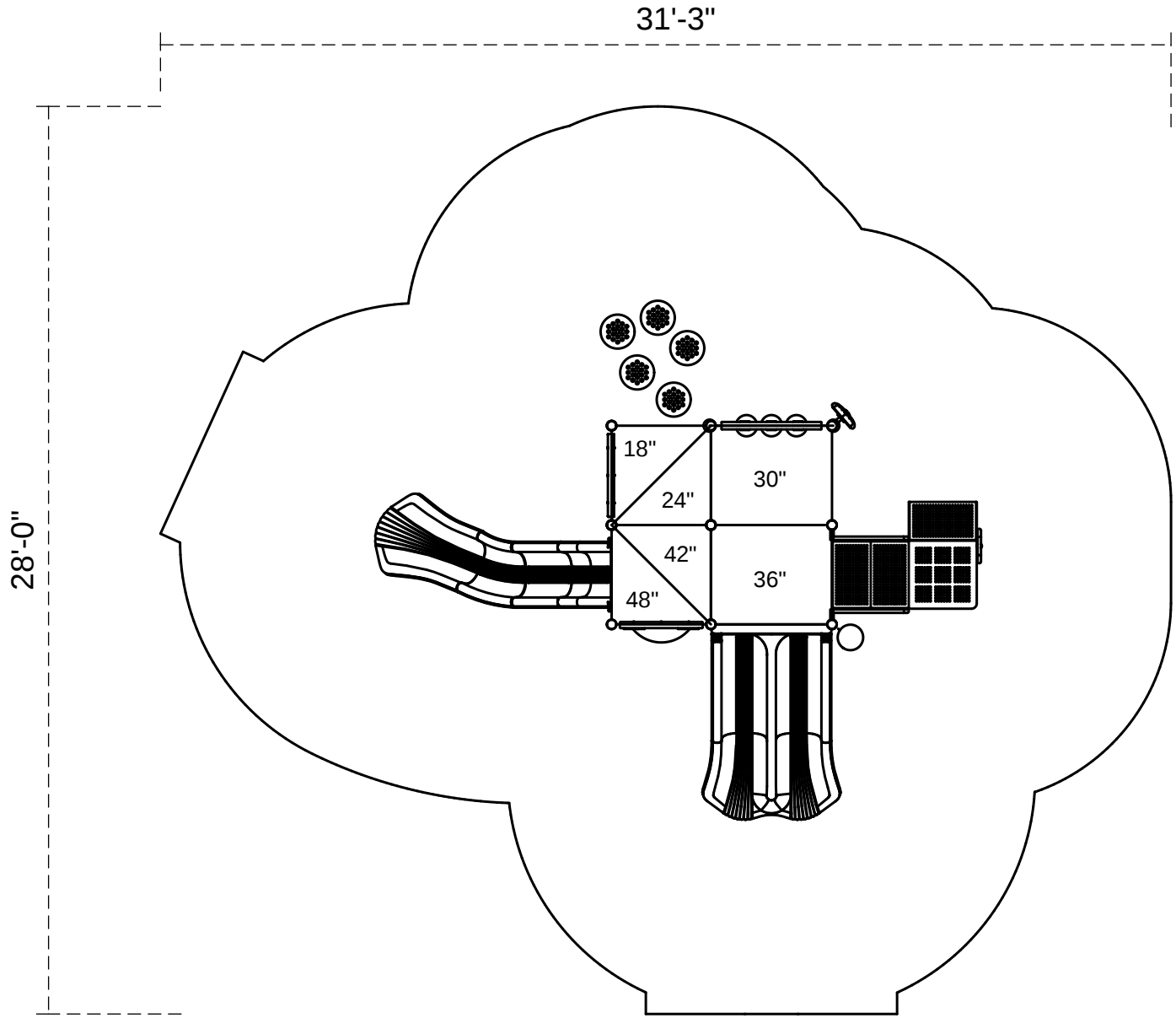

Footprint: 16' x 19'-3"
Use Zone: 28' x 31'-3"

SKU: PKP206

Created On: November 1, 2017

The information provided on this sheet is subject to change without notice.