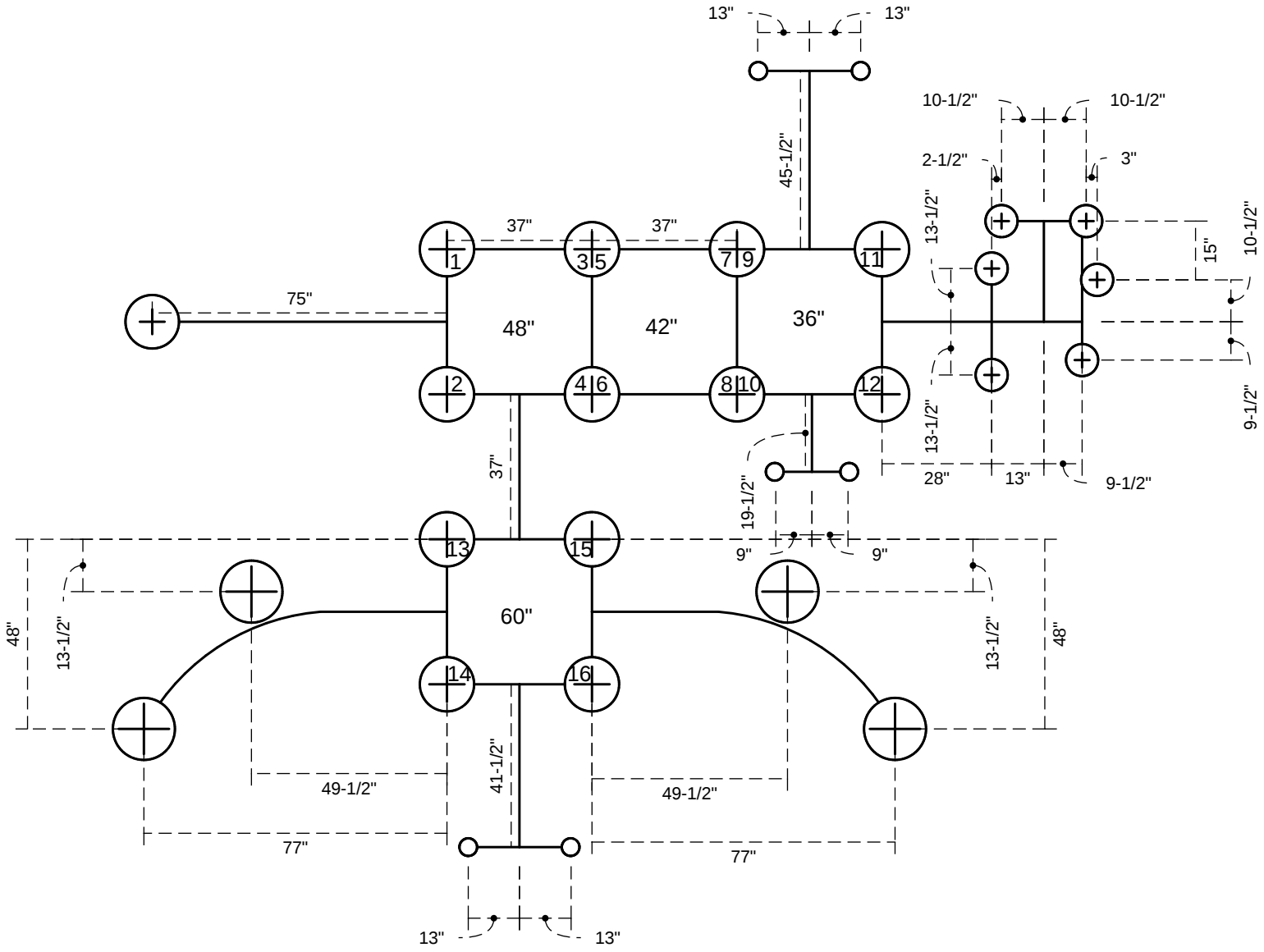

Footer Layout provided as a guide. Measurements rounded to nearest 1/2 inch. For true accuracy, please measure using equipment onsite. Equipment dimensions are subject to change without notice.

PKP242 Amarillo

March 22, 2019

Footer and Post Layout