Barrington Ridge

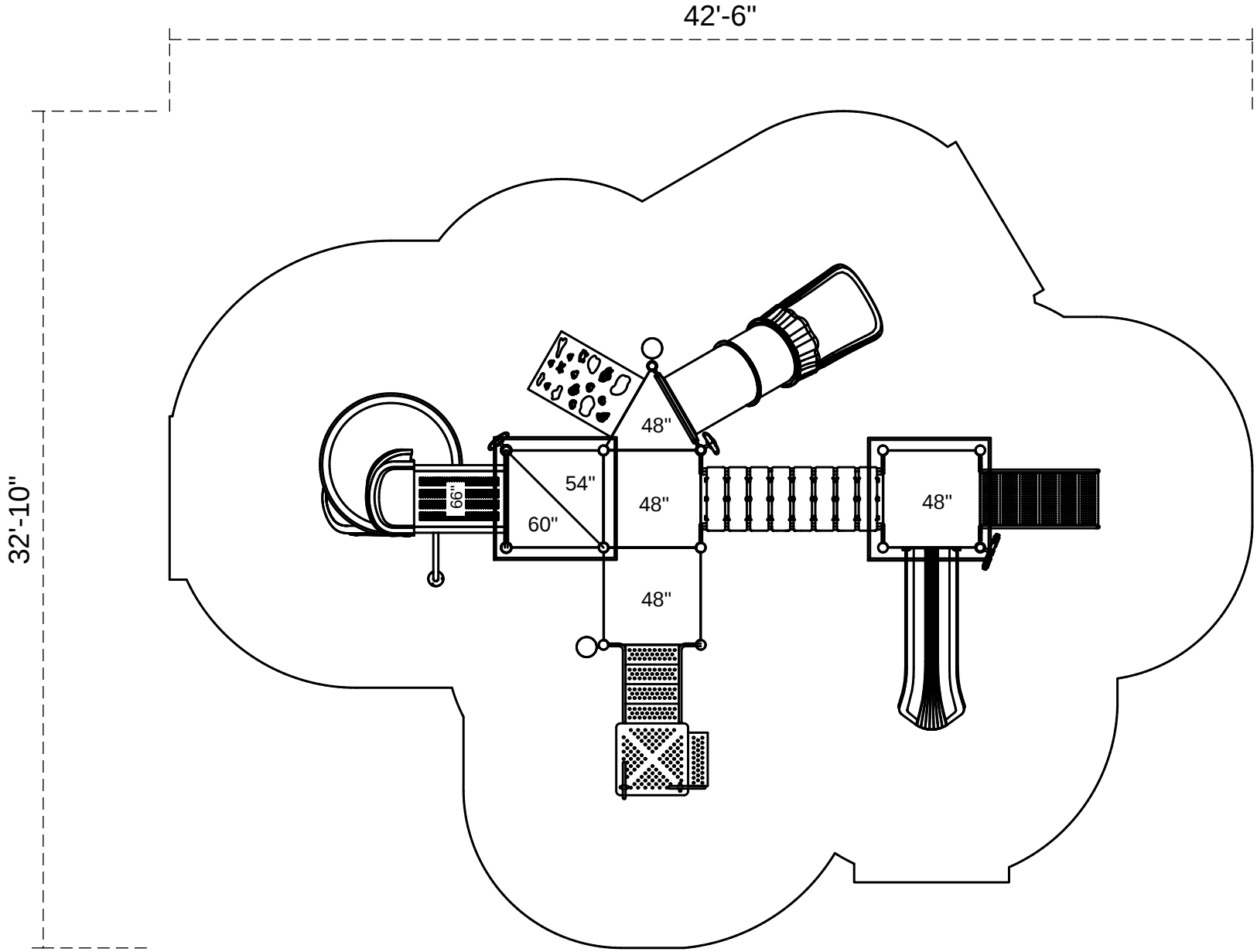

Footprint: 20'-10" x 30'-6"
Use Zone: 32'-10" x 42'-6"

SKU: PMF035

Created On: September 7, 2017

The information provided on this sheet is subject to change without notice.