Kicking Kangaroo

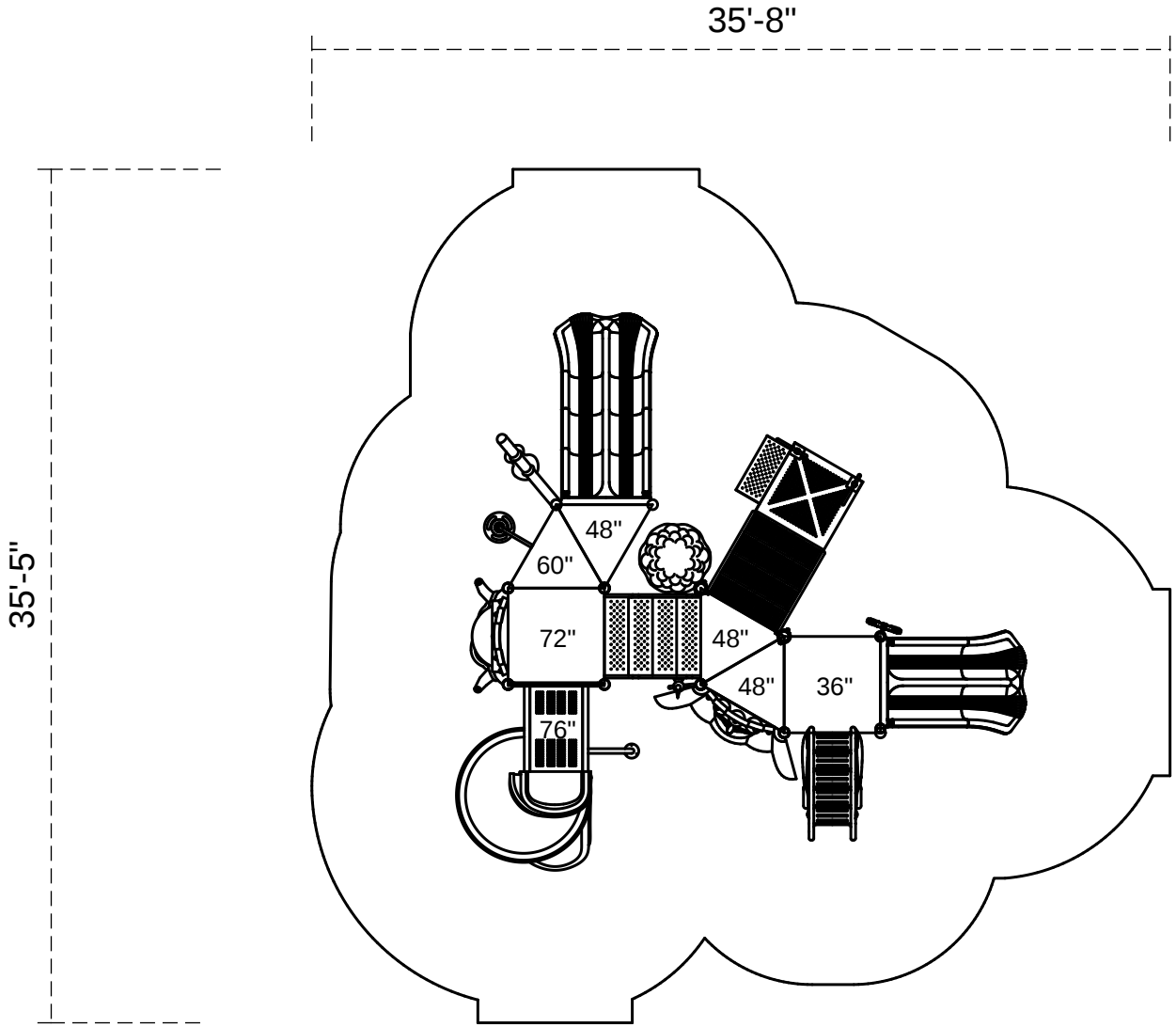

Footprint: 23'-5" x 35'-8"
Use Zone: 35'-5" x 35'-8"

SKU: PTH004

Created On: September 12, 2017

The information provided on this sheet is subject to change without notice.