WISDOM PLAYGROUNDS

CUSTOMER'S GUIDE

Customer Name:

Sales Number:

Unit Number: YJ001367

Distributor Name:

Distributor Phone Number:

Dear Valued Wisdom Playgrounds Customer,

Thank you for purchasing our Wisdom Playgrounds commercial play ystem. We appreciate the confidence you have placed in our company. We look forward to working together on this playground project as well as those in the future.

The information that follows is your Wisdom Playgrounds Owner's Manual & Assembly Instructions Manual. We have designed this information expressly for the product you have purchased. We recommend reading through the entire manual before you begin the installation and keeping it in a convenient location for future reference.

The initial pages contain important information regarding the placement, installation, and safety practices common to commercial play equipment. Also, you will find a recommended maintenance schedule, safety guidelines, warranty information, installation instructions, and the site plan. Please read this information carefully and apply these guidelines to your specific situation.

We also recommend you review our warranty. It is one of the best in the industry, and we are pleased to offer it to you. In the unlikely event, you need to use it; however, we have enclosed a copy of the warranty guidelines.

If you have any questions concerning your new play equipment, you may contact your regional Wisdom Playgrounds representative directly, or feel free to contact our Wisdom Playgrounds customer service department by phone at 910-769-3576 or email at *customerservice@wisdomplaygrounds.com* We invite you to learn more about our company and our playground product line, Wisdom Playgrounds, on our website at www.wisdomplaygrounds.com

Thank you again for the opportunity to serve you on this project. We are grateful for your business and look forward to working with you on your future playground equipment projects!

Sincerely,

Wisdom Playgrounds

Table of Contents:

Commercial Playground Safety Guidelines 1

Safety Surfacing 1
Use Zones 2
Fall Heights 2

Site Preparations 3

Before You Start 3
Storage Considerations 3
Look Below Ground 4
Look Above Ground 4
At Ground Level 5
Look Outside the Area 5
Conduct Your Inventory 5
Preparing Your Site Layout 6
Warning Labels 7
Manufacturing Labels 7
Tools Required 8

Wisdom Playgrounds Warranty 9

Supervision Guidelines 11

Loose-Filled Surfacing 12

Maintenance Guidelines 13

Maintenance 13
Inspection 14
Audit 14
Records 15
Maintenance Checklist 16

Installation/Footings 18

Footings 18
Mount Options 19

Commercial Playground Safety Guidelines

When installing your playground, it is essential always to consider the specific conditions of your location. Becoming familiar with the safety guidelines set forth by the Consumer Product Safety Commission (CPSC) will help you in maximizing your play value while enhancing your child's safety. We strongly recommend becoming knowledgeable of the playground safety guidelines published by the CPSC in pub #325, Handbook for Public Playground Safety before beginning the installation, as our play equipment is engineered and designed based on the most current CPSC standards.

For information regarding public playground safety and your responsibilities as the owner, manager, or installer of this equipment, we recommend you contact the U.S. Consumer Product Safety Commission (CPSC) for the latest copy of the Public Playground Safety Handbook. You may obtain a copy of this guidebook by contacting the CPSC at 800-638-2772 or www.cpsc.gov.

Safety Surfacing

The playground area, both around and underneath the play structure, must be covered with an accessible, impact attenuating surfacing material to help reduce the risk of severe or life-threatening injuries from a fall from the equipment. The surfacing material may be either a unitary or a loose-fill product; however, the proper material, as well as the appropriate depth/thickness, must be maintained to be effective. The surfacing depth is determined by both the type of material and the critical fall height of the play equipment. A general guide outlining the type of surfacing, critical fall height, and recommended depth of surfacing can be found in the U.S. Consumer Product Safety Commission (CPSC) in pub #325. Playground safety surfacing must be compliant with ASTM F-1292, Standard Specification for Impact Attenuation of Surfacing Materials Within the Use Zone of Playground Equipment and ASTM F-1951, Standard Specification for Determination of Accessibility of Surface Systems Under and Around Playground Equipment. The playground safety surfacing manufacture will be able to provide the necessary documentation that denotes compliance.

The playground safety surfacing manufacture will also be able to recommend the appropriate depth of playground safety surfacing based on the critical fall height for the playground equipment. The critical fall height for the playground equipment is noted on the plan view as HDPS Highest Designated Play Surface.

Surfaces such as asphalt, concrete, gravel, or sod are not acceptable for use under playground equipment, or anywhere within the stated minimum area required. In order to meet the safety standards, worn surfacing must be repaired in order to meet safety standards. Concrete footing should never be exposed, and surface depth should comply with installation instructions.

Use Zones

The use zone for equipment should extend a minimum of 6’ in all directions from the perimeter of the equipment. The use zones of two stationary pieces of playground equipment that are positioned adjacent to each other may overlap if the adjacent designated play surfaces of each structure are no more than 30” above the protective surface, and the equipment is at least 6’ apart.

If adjacent designated play surfaces on either structure exceed a height of 30”, the minimum distance between the structures should be 9’. Use zones of the play equipment, as well as the fall height of the equipment, will be shown in the plan view drawing and must be adhered to for safety purposes.

Fall Heights

Unless specified otherwise, the fall height of a piece of equipment is the distance between the highest designated playing surface and the protective surfacing beneath it.

Site Preparation

Review the entire Wisdom Playgrounds Owner's Manual & Assembly Instruction Manual before beginning the installation. Wisdom Playgrounds takes great pride and effort to ensure your equipment meets or exceeds all currentConsumer ProductSafety Commission (CPSC), American Society for Testing and Materials (ASTM) guidelines, and International Play Equipment Manufacturers Association (IPEMA) standards in effect at the time of your purchase.

Before You Start

Contact local and regional authorities regarding any building codes or permit requirements before beginning installation. Also, it is common practice to contact your insurance carrier to ensure your playground area has adequate insurance coverage.

Storage Considerations

When you receive your play equipment, we recommend that the installation takes place as soon as possible. Equipment is packaged to keep it safe and damage-free during shipment. However, the packaging material is not suited for periods of extended time in an uncontrolled environment. Both moisture and heat generated inside the plastic packaging may cause damage to the powder-coated finish if left for extended periods.

We recommend storing equipment in a controlled environment, such as a storage container or indoors. If this is not possible, the packaging material should be removed from the equipment.
In addition, large roto-molded parts (panels, arch bridge panels, slide hoods, etc.) need to be stored flat to prevent warping.

Look Below Ground

Always arrange for your state's 811 underground utility services to locate any buried utilities, which could include the following:

- Water
- Sewer
- Telecommunications
- Cable
- Electric
- Sprinklers
- Drainage pipes

This is a free service and knowing where underground utilities are located will determine if your site location is suitable and can influence how your playground will be configured.

Look Above Ground

Overhead obstructions within the use zones of playground equipment that are not part of the play structure (i.e. tree limbs) should be at least 7' above each designated play surface and the pivot point of swings.

All overhead utility or power line clearances above the use zone areas shall comply with all local, state, and national codes, such as the National Electrical Safety Code

At Ground Level

The playground location should be graded flat to create the safest area possible. Soil conditions and the ground slope will impact water drainage. You may desire to inquire with local contractors for recommendations on grade and drainage concerns. Special installation considerations must be implemented for sites that are not level.

Identify any additional structures in the area (trees, poles, walkways, fences, signs, etc.) to ensure the placement of the playground in relation to these fixed structures meets all required clearances. All asphalt, concrete, and other such debris must be removed from the site prior to installation.

Look Outside the Area

Identify hazards in the area that may require fencing or re-directed traffic patterns. It recommendedtomaintainsafedistancesfromhazards, suchasswimming ponds, roads, drop-offs, etc. It is highly recommended that children be a safe distance from such hazards, mitigating the risk of injury while still allowing for observation by parents or teachers. If fences are used, they should conform to local building codes and/or ASTM F-2049.

Conduct Your Inventory

Each instruction guide contains a packing list of all parts and hardware necessary for a successful installation. An inventory of all parts, including hardware, should be conducted **PRIOR** to the installation. This will ensure that the components are accounted for as you get ready to star. If you have any missing or damaged parts, please contact your sales representative **IMMEDIATELY**! Wisdom Playgrounds is not responsible for parts discovered missing over ten days after receipt of the shipment.

Preparing Your Site Layout

The site plan and the footing diagram provide accurate measurements and markings for the playground footprint. Use the dimensions shown between footings on the footing diagram to layout the actual footprint of the play structure. Locate any freestanding play equipment in the same manner, providing the necessary clearance between the equipment as well as any fences, trees, etc.

If the site cannot be graded level, adjust the depth of footings to maintain a level footing base. If soil conditions are loose or unstable, a larger diameter footing may be required. After marking your footing locations, playground perimeter, and use zone perimeter, locate and set center deck posts. Form center posts in concrete. Allow concrete to cure for at least 24 hours before adding the additional posts and decks as outlined in the site plan. Once all decks are installed, components such as slides, climbers, etc., can be connected per their respective assembly instructions. Note that connecting components between decks, such as crawl tunnels and bone bridges, should be installed concurrently with the decks to ensure an accurate fit. Unless directed by an experienced installer, assemble the entire structure before pouring the rest of the concrete. Concrete with a minimum psi of 2,500 must be used and should be mixed in accordance with the manufacturer's specifications. It is recommended to allow 48 hours for the final concrete to cure before the playground is opened for use.

IMPORTANT: Never leave the installation site unattended without making sure that all fastening hardware on all equipment is tight. Failure to do so may result in injury or equipment damage. The installation areas should have clearly marked warning signs indicating that the playground area is a designated construction zone. Usage of the equipment at any stage of the installation process prior to completion will attract unauthorized activity regardless of its actual state of readiness. After work hours, it is recommended to surround the play area with portable safety fencing or caution tape and signage to deter any trespassing onto the construction area.

Even during installation, children can gravitate to unattended equipment, thereby increasing safety risks. Do not attach swing chains, exercise rings, or similar moving components until the entire construction is complete and safety surfacing is in place.

In addition, never leave the job site unattended without making sure that all open holes are covered with a material such as plywood. Rope off all unfinished equipment to keep the children away until the build is complete.

It is recommended that you have a Certified Playground Safety Inspector (CPSI) on-site during installation. Upon completion of the installation (including safety surfacing and all site amenities), the playground should be audited by a Certified Playground Safety Inspector (CPSI), providing documentation indicating the playground is installed correctly and meets the guidelines set forth by the Consumer Product Safety Commission.

Warning Labels

Wisdom Playgrounds provides warning labels that must be installed on vertical posts to comply with ASTM 1487, which reads, **"Warning: Installation over a hard surface such as concrete, asphalt or packed earth may result in serious injury or death from falls."**

Manufacturing Labels

Wisdom Playgrounds provides manufacturer labels in the installation kit. These labels must be installed to comply with CPSIA Section 103A. A manufacturer label is required on each independent play unit.

Tools Required

Tools normally required include the following:

- ☐ Wheelbarrow (for mixing concrete)
- ☐ Power Drill, 3/8” (with extension cord if necessary)
- ☐ Levels
  - ○ String Level
  - ○ Magnetic Torpedo Level
  - ○ 4ft Level
- ☐ Standard Tool Kit
- ☐ Wrench Set
- ☐ Allen Wrench Set
- ☐ Tin Snips
- ☐ Box Cutter / Razor Tool
- ☐ Mallet
- ☐ Shovels
- ☐ Rakes
- ☐ Posthole Digger / Auger
- ☐ Tape Measure

Wisdom Playgrounds Warranty

Wisdom Playgrounds warrants to its original customer for as long as the original customer owns the product and uses the product with regular use and installation in accordance with published specifications to be free from defects in materials and workmanship.

This warranty does not cover damage from misuse, vandalism, modified parts, or damage such as dents, scratches, fading/weathering, acts of God, and normal wear and tear.

Warranty claims must be filed within the applicable warranty period. Warranty replacement does not include the cost of labor for part replacement. Replacement parts carry the applicable warranty from the date of shipment of the replacement part.

One Hundred (100 Year Limited Warranty

- On aluminum and steel upright posts against structural failure due to deterioration, corrosion, or workmanship
- On hardware against structural failure due to deterioration, corrosion, or workmanship
- On post caps and clamps against structural failure due to deterioration, corrosion, or workmanship

Fifteen (15) Year Limited Warranty

- On rails, rungs, rigid climbers, loops, and decks against structural failure due to deterioration, corrosion, or workmanship
- On all HDPE and rotationally molded plastic components against structural failure due to materials, or workmanship

Five (5) Year Limited Warranty

- On cables and nets against premature wear due to natural deterioration or manufacturing defects
- On moving parts against structural failure due to materials or workmanship

One (1) Year Limited Warranty

- On all materials and products not covered above against failure due to materials or workmanship

Warranty Procedure

To make a warranty claim, submit your request in writing, including photographs of defective equipment, and the original purchase invoice or invoice number to your Wisdom Playgrounds representative.

We will review the information and communicate options with you. If the product is under warranty, we will replace the defective part, including freight costs. Wisdom Playgrounds is not responsible for labor costs to replace the part. Wisdom Playgrounds reserves the right to inspect all products identified as defective, and photos of defective equipment will be required to accompany warranty claims.

Supervision Guidelines

Even playgrounds that are designed, installed, and maintained in accordance with safety guidelines and standards can still present hazards to children in the absence of adequate supervision. The goal of playground safety is to remove hazards and minimize injury while playing, but these risks cannot be eliminated entirely. Because all playgrounds present some challenges, and children can be expected to use equipment in unintended ways, injuries can occur. It is the responsibility of a playground supervisor to understand the basics of playground safety. Supervisors should be aware that the playground equipment is designed based on the most current CPSC guidelines. For more information on playground guidelines, go to the Consumer Product Safety Commission's website at www.cpsc.gov.

The following are some general guidelines to follow:

- Direct children to age-appropriate activities. Keep in mind that not all playground equipment is appropriate for all children who may use the playground. The range of users encompassed by this CPSC specification is the 5th percentile 2-year-old through the 95th percentile 12-year-old. It is essential to recognize that preschool-age children require more attentive supervision on playground equipment than older children
- Children should not wear loose clothing, hoods, drawstrings, or jewelry while on the playground equipment. These items increase the risk of injuries related to strangulation due to entanglements
- Make sure children are wearing proper footwear
- Check for and remove unsafe modifications that are not part of the design, especially ropes tied to equipment, before letting children play
- Look out for dangerous horseplay, such as children throwing protective surface materials, jumping from heights, etc.

- Watch for and stop children from wandering away from the play area
- Check for properly maintained protective surfacing
- Prohibit use of playground while wet
  - Wet equipment will not provide the necessary traction and gripping capability
  - Slips or falls may occur
- Observe play patterns to note possible hazardous play and overcrowding on playground equipment

Loose-Fill Surfacing

Surfacing should be checked regularly to ensure it has not displaced significantly, particularly in areas of the playground most subject to displacement (heavy traffic areas such as stair entry and slide exits). Displaced loose-fill surfacing should be raked back into proper place so that a constant depth is maintained throughout the playground area.

Routine maintenance for surfacing:

- Activities in areas under swings and slide exits tend to displace surfacing quickly. Rake loose-fill surfacing back in place to ensure proper depth/ thickness
- Wet mulch compacts faster than dry, fluffy mulch. If pooling water is noticed regularly on mulch surfacing, consider addressing drainage issues
- Most loose-fill surfacing that freezes solid no longer functions as protective surfacing. Even if the first few inches are loose, the base layer may be frozen, and the impact attenuation of the surfacing may be significantly reduced

Contact your playground installer for more information about loose-fill safety surfacing or the manufacturer of the surfacing for recommended maintenance and inspection requirements.

The attached list is a helpful guide in maintaining your playground. It is intended to address general maintenance concerns to be performed on a periodic basis. It does not provide a complete safety inspection of the playground equipment. It is recommended to have your playground inspected by a Certified Playground Safety Inspector annually.

Maintenance Guidelines

A consistent and thorough maintenance plan for each playground and independent play unit is the most effective way to keep your playground safe. Train the right people to oversee maintenance schedules and conduct inspections. We recommend the playground safety course offered by the National Recreation and Parks Association. With the successful completion of the course, a participant will earn the Certified Playground Safety Inspector (CPSI) certification, which is good for three years.

Maintenance

Maintenance reviews should be carried out in a systematic manner by trained personnel familiar with the playground area, such as maintenance workers, playground supervisors, etc. Any damaged or worn parts or any other hazards identified during a review must be repaired or replaced before allowing children to use the playground equipment.

The frequency of maintenance will be determined by several factors, such as the frequency of use, number of children using each unit, age of children, age of equipment, the surrounding area, and frequency and severity of inclement weather.Maintaining your playground equipment as well as its surrounding area, is essential to minimizing the risk of injury to users, as well as maximizing your playground's useful lifespan.

We recommend the following maintenance procedures be followed:

- **On a daily basis**: A responsible individual should conduct a brief visual check for structural defects, signs of vandalism, and litter of foreign matter that needs to be removed.
- **On a weekly basis**: A responsible individual should complete the checklist on the following pages. Any required repairs should be detailed on the separate maintenance Once the repairs are completed, file the signed checklist and the record for future reference. A dated file and form should be kept for each play structure at each location.

Inspection

Inspections should be carried out by a certified playground safety inspector (CPSI). Check with your local area to find if there are current regulations regarding playground inspections.

Audit

Audits are conducted at milestones in the life of your playground. An audit includes a full inspection as well as a maintenance plan. Audits are recommended at the completion of the installation, a renovation, or significant addition. Part of the audit will include a maintenance plan and an inspection schedule.

Records

All maintenance and signed inspection reports must be kept on file. The maintenance records support your audit and action plan. The audit will continue to play a major role in the inspection and maintenance program by measuring progress, recording actions taken, and recommendations made.

Other important information to keep on file includes information about the manufacturer, sales representative contact information, sales brochures, date of purchase, sales/purchase order receipt, shipping information, renderings and drawings, bill of materials/packing list, installation instructions, date of installation, installer contact information, and warranty information. A record of any accident or injury reports should be retained on file as well.

Maintenance Checklist

Play Structure in General

- ☐ Post and component footings are not exposed, cracked, or loose
- ☐ Clamps show no sign of slippage, cracking, or failure
- ☐ Clamp drive rivets and hardware are secure
- ☐ Welds are intact and free of cracks
  - ☐ Slide and Deck Enclosures
  - ☐ Overhead Activities
  - ☐ Climbers
- ☐ No rust or corrosion
- ☐ No splintered, cracked, gouged or otherwise deteriorated plastics; check for integrity of the plastic, keep plastic clean of any extraneous substances, verify that any deformation does not create entrapment as specified on ASTM F-1487 Sec. 6
- ☐ No scratched, chipped, or peeling paint
- ☐ Metal parts show no visible cracks, bending, warping, or breakage
- ☐ No missing bolts, nuts, etc.
- ☐ All bolts & nuts and fasteners are tight
- ☐ All joints are secure **(pay special attention to sectional slides, flush mounted decks, and pipe connections)**
- ☐ All swivels, bearings, grease fittings, and moving parts are well lubricated and not excessively worn **(pay special attention to tot & strap swing seats)**
- ☐ No broken or missing parts
- ☐ No sharp edges or unsafe protrusions (check metal corners, bolts, etc.)
- ☐ No exposed mechanisms, junctions of moving parts, or components are posing possible pinch or crush points

Play Events

☐Plastic is not cut or cracked

☐All slide supports/anchors are intact and secure

☐All ‘S’ hooks are closed and not excessively worn

Swings

☐All ‘S’ hooks or clevises are closed and not excessively worn

☐No exposed metal on swing seats

☐Swing chain is in good condition and not excessively worn, especially at connection points

☐Connectors and chain have free movement

Surrounding Area

☐Resilient surfacing material is not scattered or excessively worn **(pay special attention to area at the end of slides and under swings)**

☐Resilient surfacing material is adequately deep and retains its fall absorbing abilities as specified at time of installation

☐Border around playground is in good condition and has not come loose

☐No roots, rocks, or other objects are causing a tripping or injury hazard

☐Area is clean of litter (no broken glass or bottles, etc.)

Footings

Any components that require a footing (vertical post, slide foot, climbers, etc.) are set at a length to accommodate 12” of surfacing material. If a different depth of surfacing will be used, modifications need to be made. **EXAMPLE: If only 8” of surfacing material will be used, posts or legs will either need to be cut down 4” or footings will need to be dug 4” deeper.**

When concrete is poured in footing, 4” needs to be left at the top to allow for backfill of sub-grade. Any components that require a footing (vertical post, slide foot, climbers, etc.) are set at a length to accommodate a specific deck height. If deck height is modified from standard, modifications need to be made to the part. **EXAMPLE: If a component is made for a 72” deck height, but is being used on a 68” deck height, posts or legs will need to be cut down 4” -- plus any additional adjustments for surfacing as described above.**

Most climbers are now being manufactured for specific deck heights. This will save installation time by eliminating the need to cut every climber down that is being installed at a deck height less than 72”. **EXAMPLE: A coil climber is now manufactured for a 24”, 36”, 48”, 60” and 72” deck height instead of only for a 72” deck height.**

With the exception of the first central post, all equipment should be put together first and leveled before concrete is poured in footings.

Concrete must have a minimum rating of 2,500 psi and must be mixed per manufacturer’s recommendations. Allow the concrete to cure for at least 48 hours before equipment usage! **NOTE:One 80lb bag of concrete yields approximately 0.60 cubic feet.**

(DETAIL 1)

Support Post Footing Detail

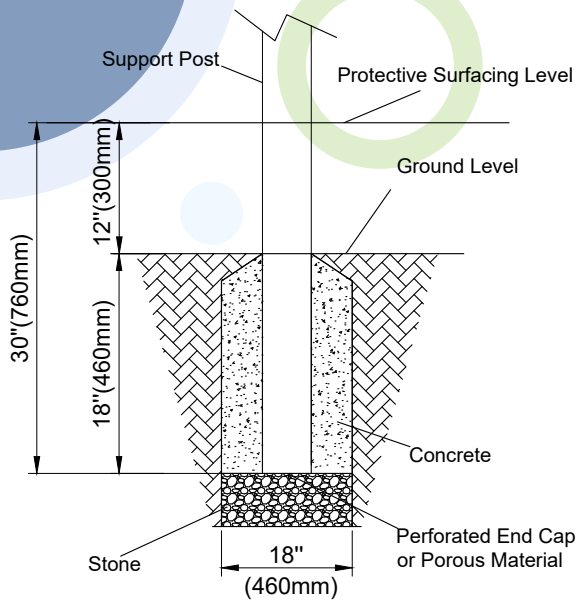

(DETAIL 2)

Single Post Footing Detail

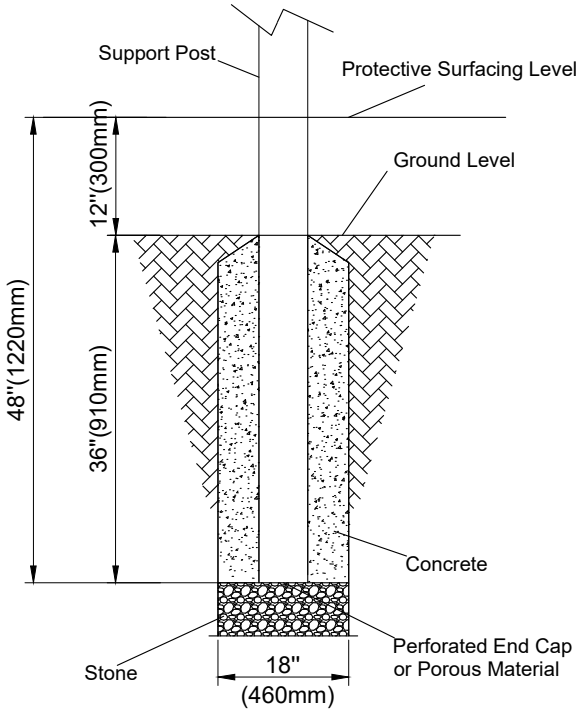

(DETAIL 3)

Component Footing Detail

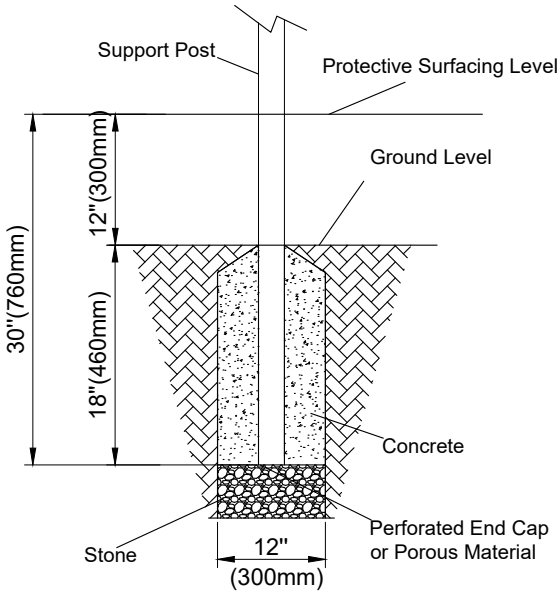

(DETAIL 4)

Surface Mount Detail

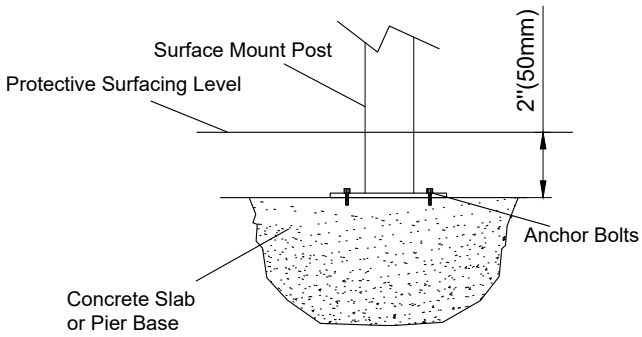

INSTALLATION NOTES:

(1) Paved surfaces such as asphalt and concrete,are not acceptable for use under your structure.
(2) It is the consumer's responsibility to check with local utilities prior to excavating footings for any underground utility lines that may exist within the installation area.
(3) It is the consumer's responsibility to check local soil conditions and drainage within the site area. Inquire with local contractors for appropriate recommendatlons.
(4) If the structure is to be installed across uneven terrain, maintaln the support post mark for protective surfacing level at the lowest grade. Adjust other footings accordingly.
(5) The base of footings must be below frost lines.
(6) Do not encase the bottom of support posts in concrete. Place all posts directly on packed stone.
(7) Assemble the entire structure before pouring concrete unless specifically instructed to do so in the individual component installation instructions.
(8) Read completely the installation instructions provided with your structure prior to beginning construction

SITE NOTES:

(1) The site plan provided must be checked against the actual site area to ensure that placement of your structure meets required clearances.
(2) The dimensions labeled are for location of footing holesnot exact placement of equipment.Assembleplumband level equipment before pouring concrete.
(3) There must be a minimum distance of 6(1830mm) between any obstacle, sidewalk,etc., and your structure.
(4) Slides must have a use zone that extends out from the lower exit section of the slide a distance that is at least 6(1830mm)or equal to the vertical disiance from the highest point of the sliding surface to the top of the protective surfacing,whichever is greater.The slide use zone should not exfend greater than 8'(2438mm) from the end of the lower exit section.
(5) The complete area, including the space under and around the equipment, must be covered with an impact attenuating material. See the 1997 publication,"Handbook for Public Playground Safety" publlished by the U.S.Consumer Product Safety Commlssion, for guidellines and recommendations on the type and depth of surfacing material. For a copy of the "Handbook for Publlic Playground Safety" write to: U.S. Consumer Product Safety Commission
Office of information and Public Affairs
WashingtonDC.20207
(6) Supervise children as they play.

TAMPER RESISTANT TORX-BOLT

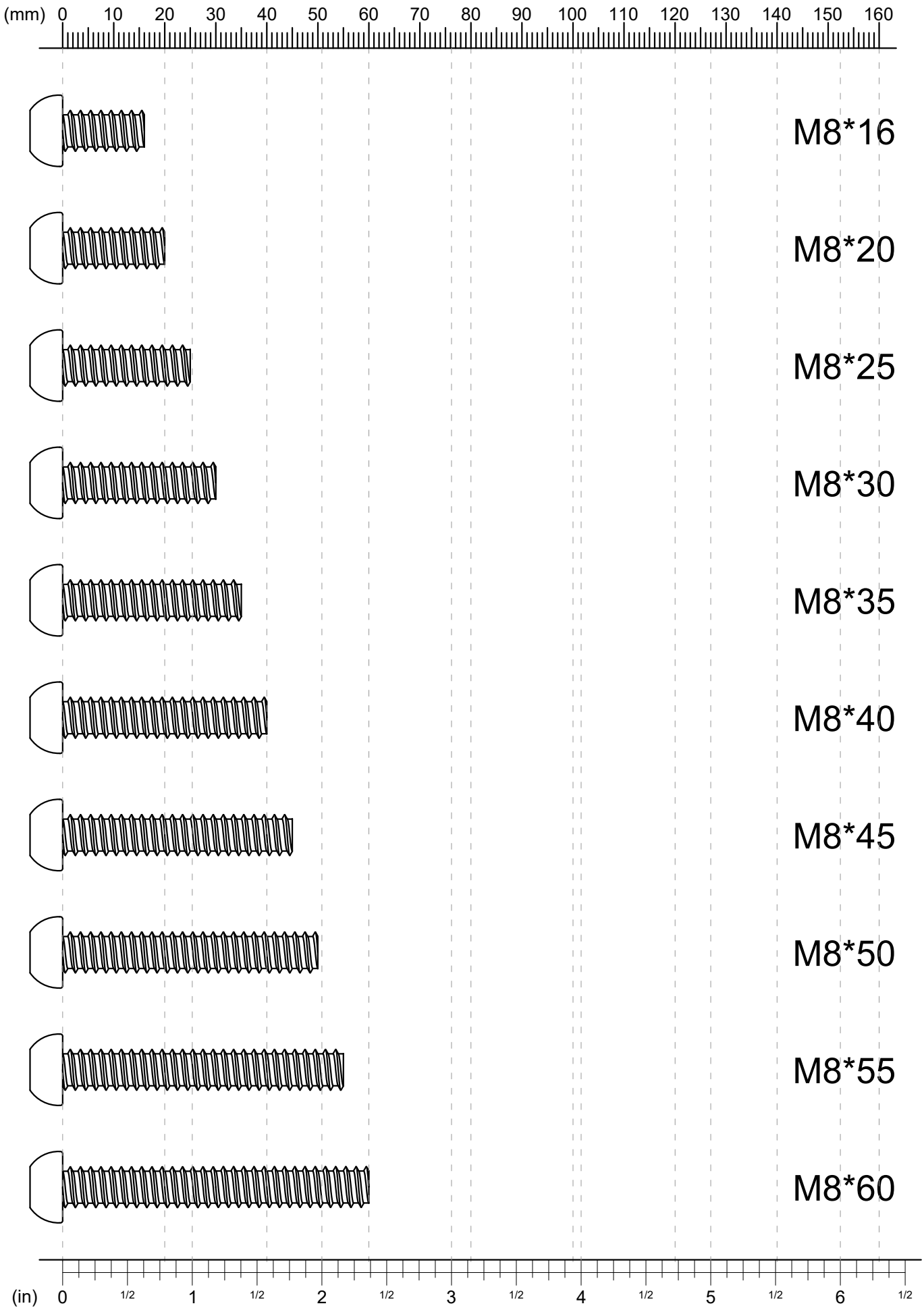

TAMPER RESISTANT TORX-BOLT

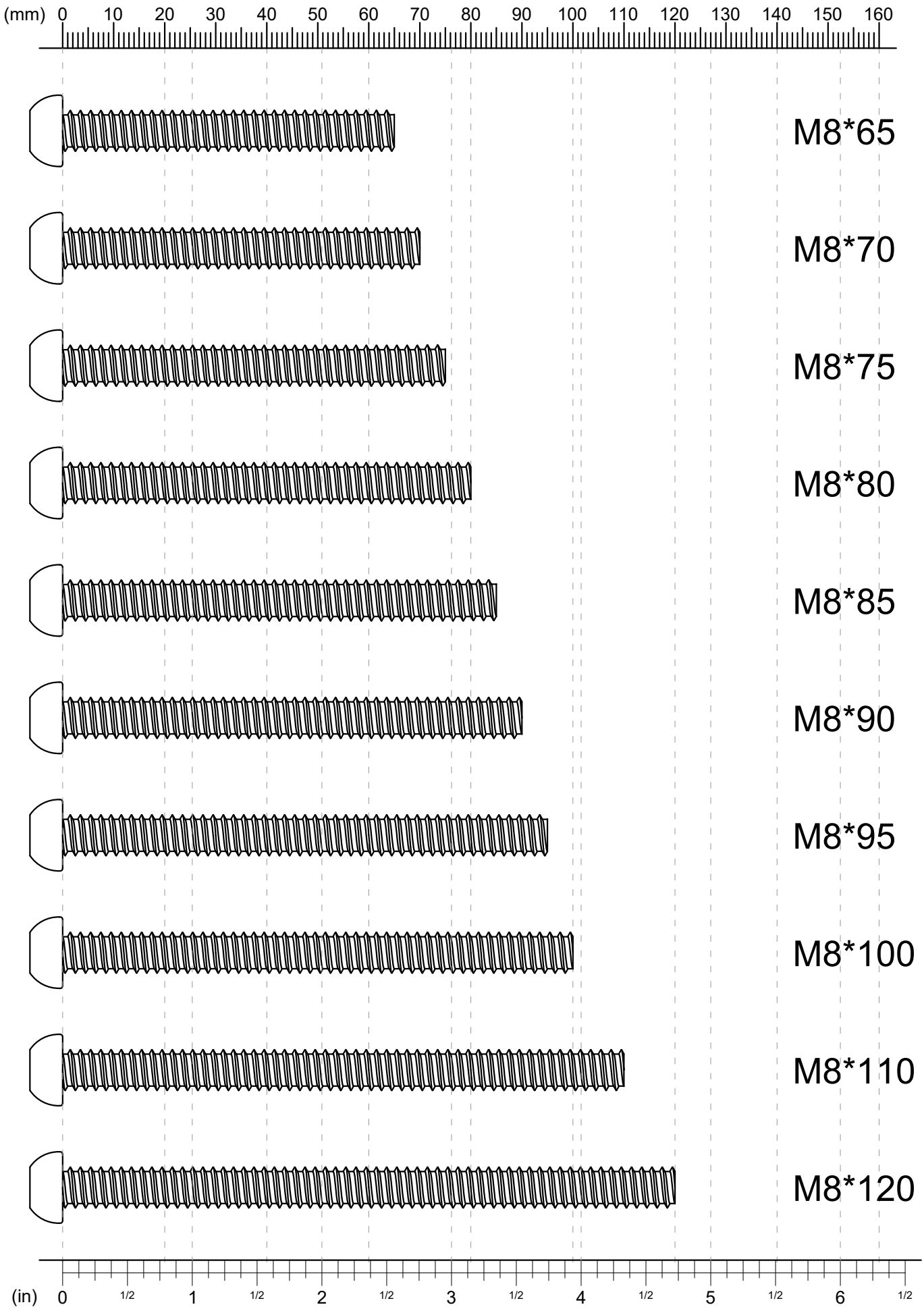

TAMPER RESISTANT TORX-BOLT

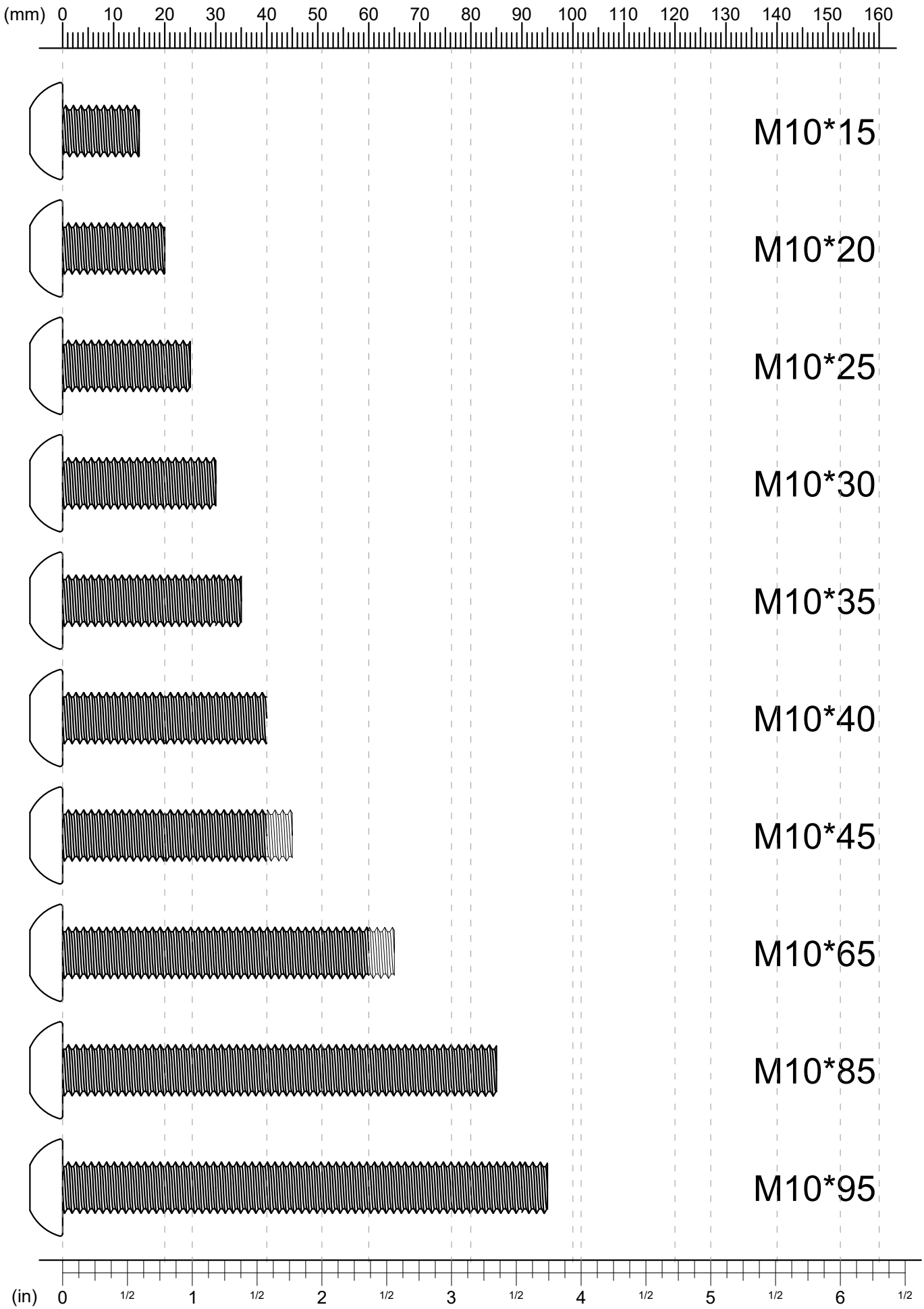

TAMPER RESISTANT TORX-BOLT

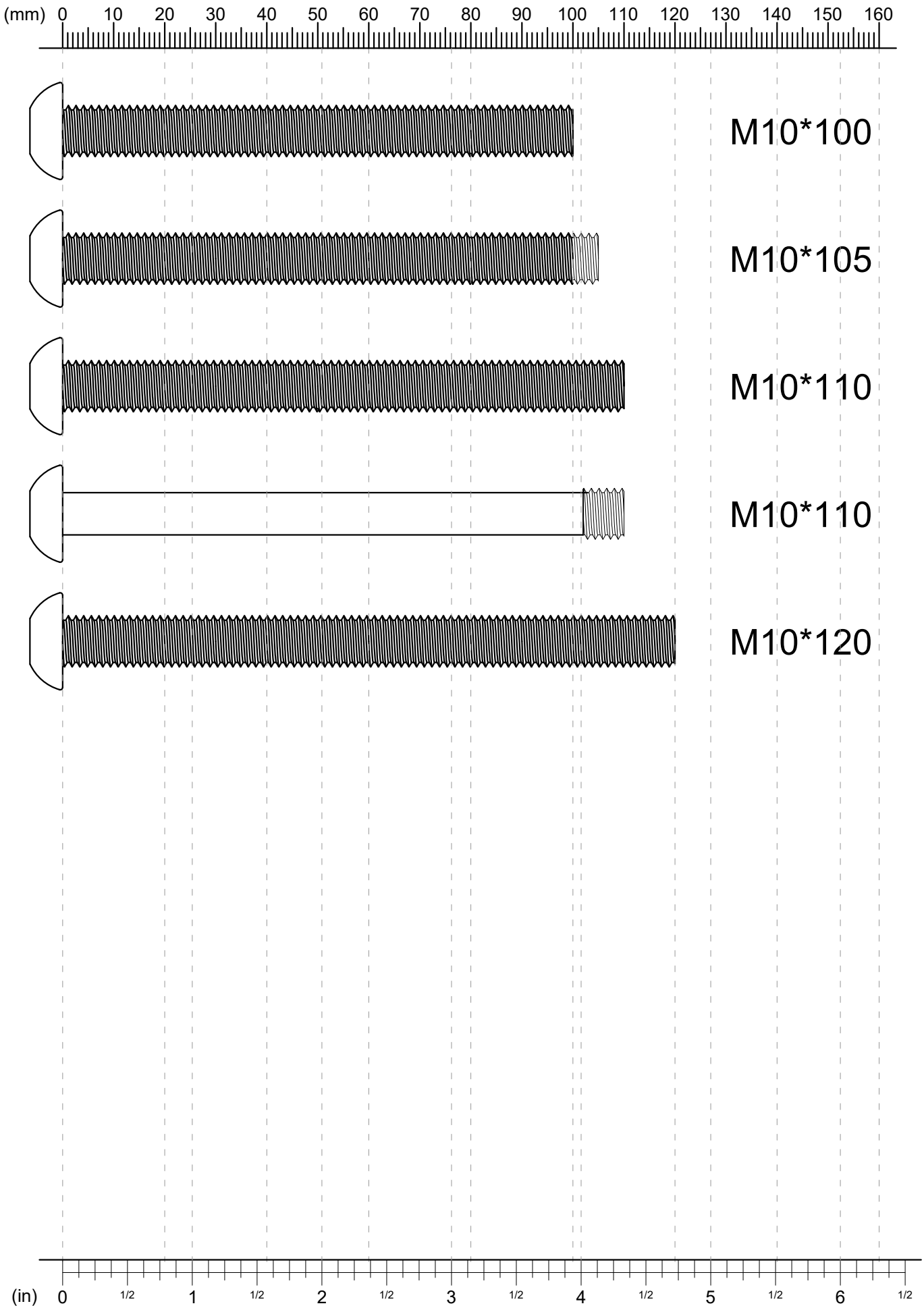

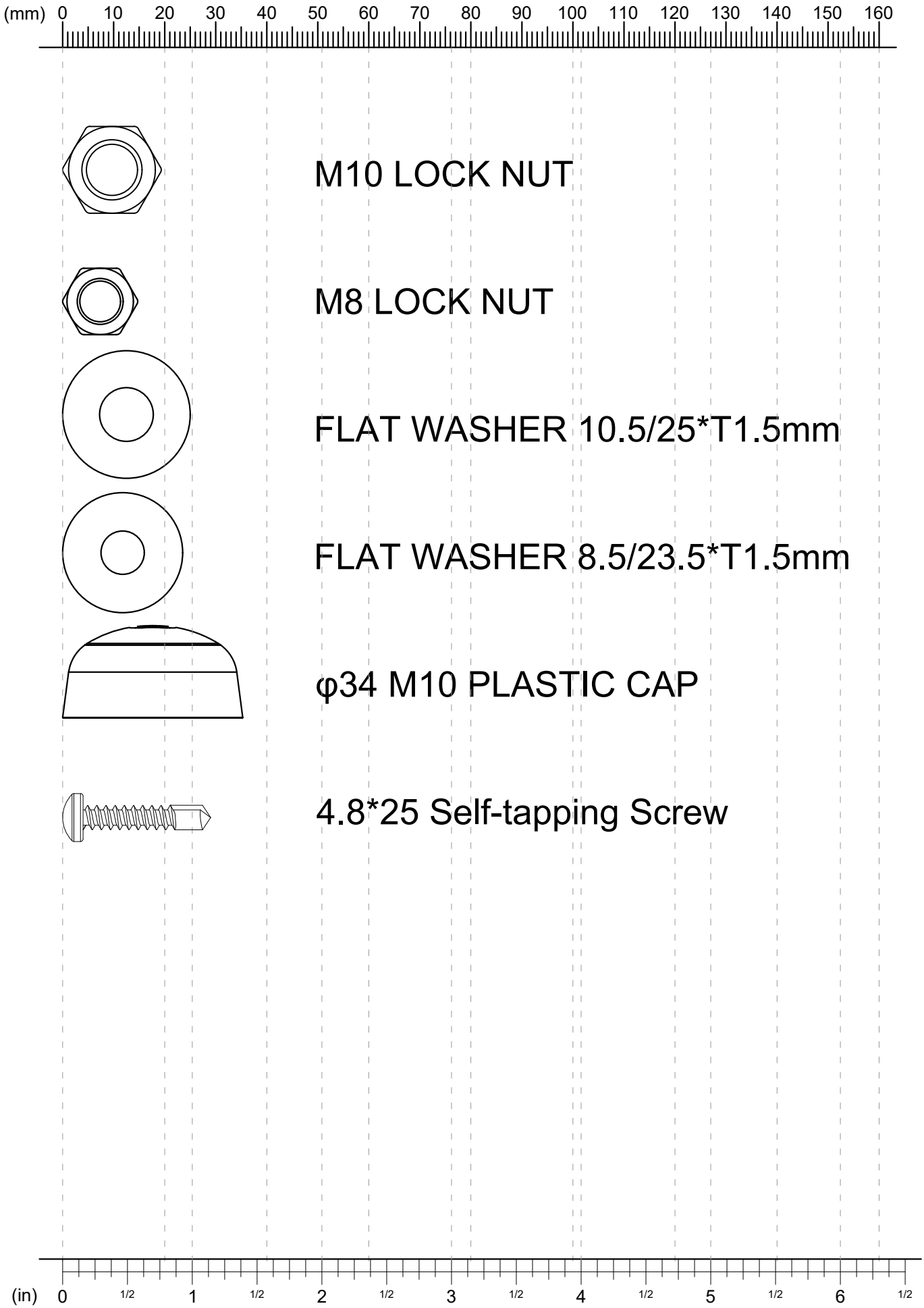
(mm) 0 10 20 30 40 50 60 70 80 90 100 110 120 130 140 150 160
M10 LOCK NUT
M8 LOCK NUT
FLAT WASHER 10.5/25*T1.5mm
FLAT WASHER 8.5/23.5*T1.5mm
φ34 M10 PLASTIC CAP
4.8*25 Self-tapping Screw
(in) 0 1/2 1 1/2 2 1/2 3 1/2 4 1/2 5 1/2 6 1/2

Thank-You

for the

Opportunity

to

Serve You!

3879 US Highway 421, Unit 110 & 120, Wilmington, NC 28401
www.wisdomplaygrounds.com
910-769-3576

Plane

Site Layout

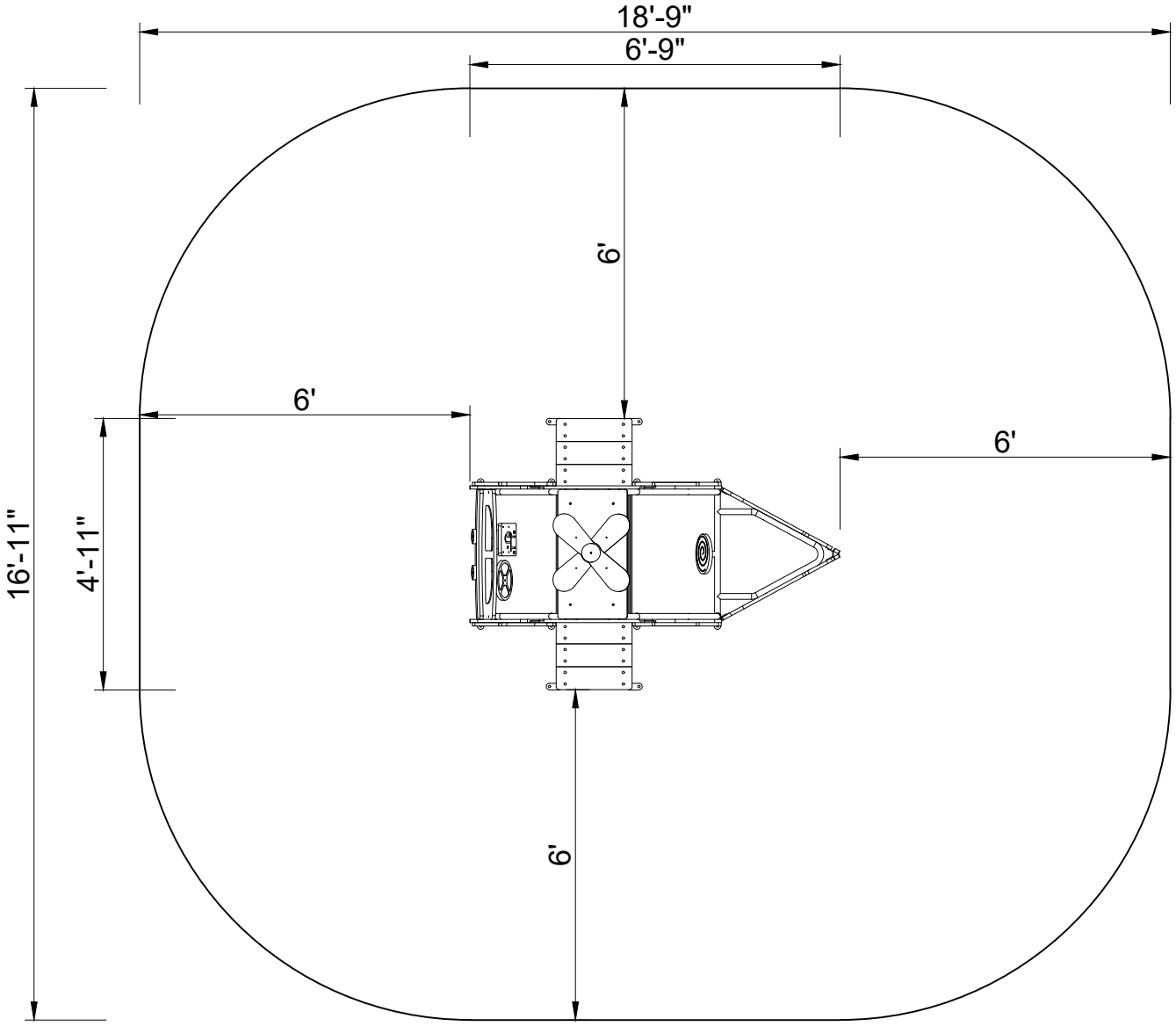

Footing Diagram

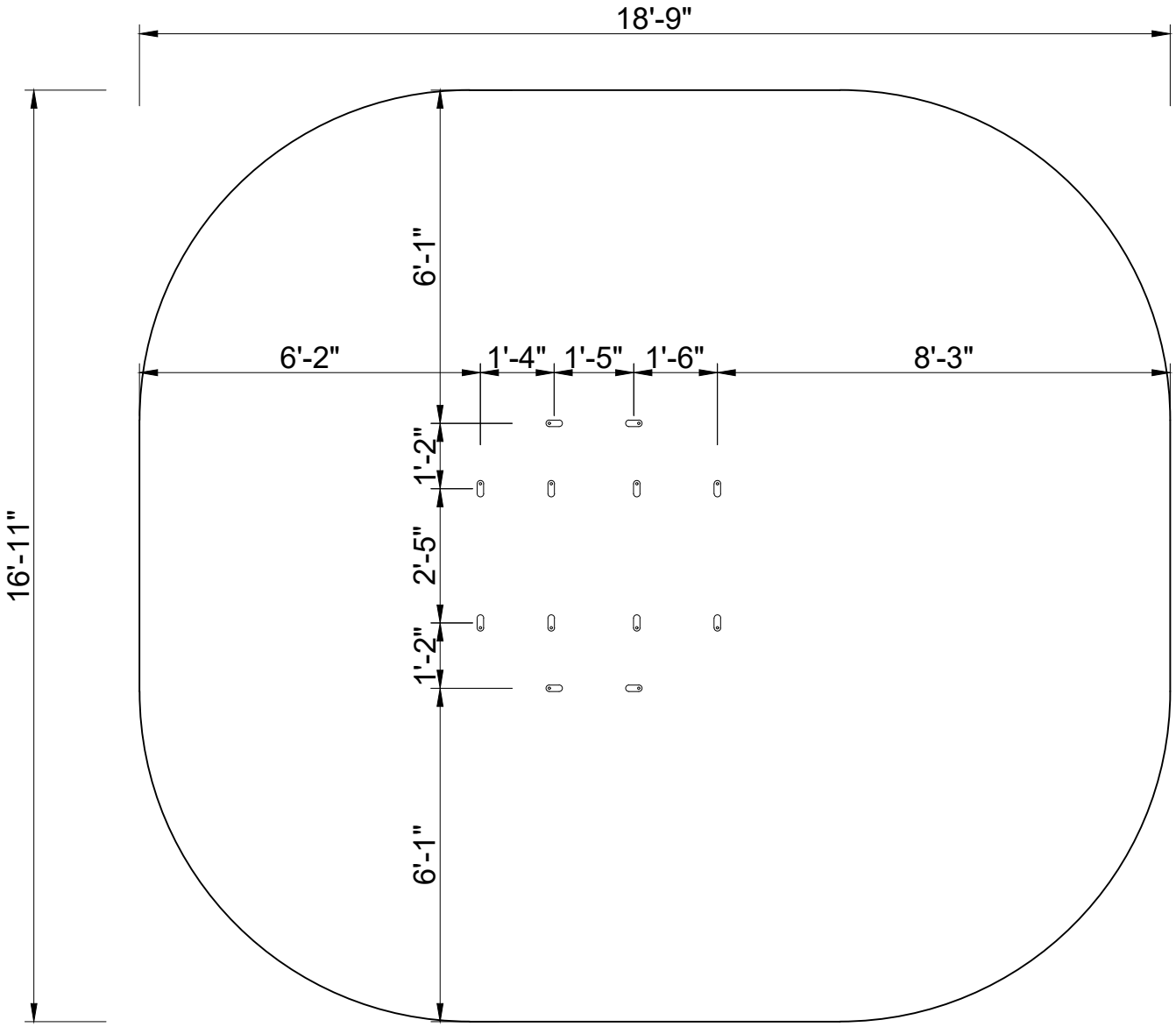

part list:

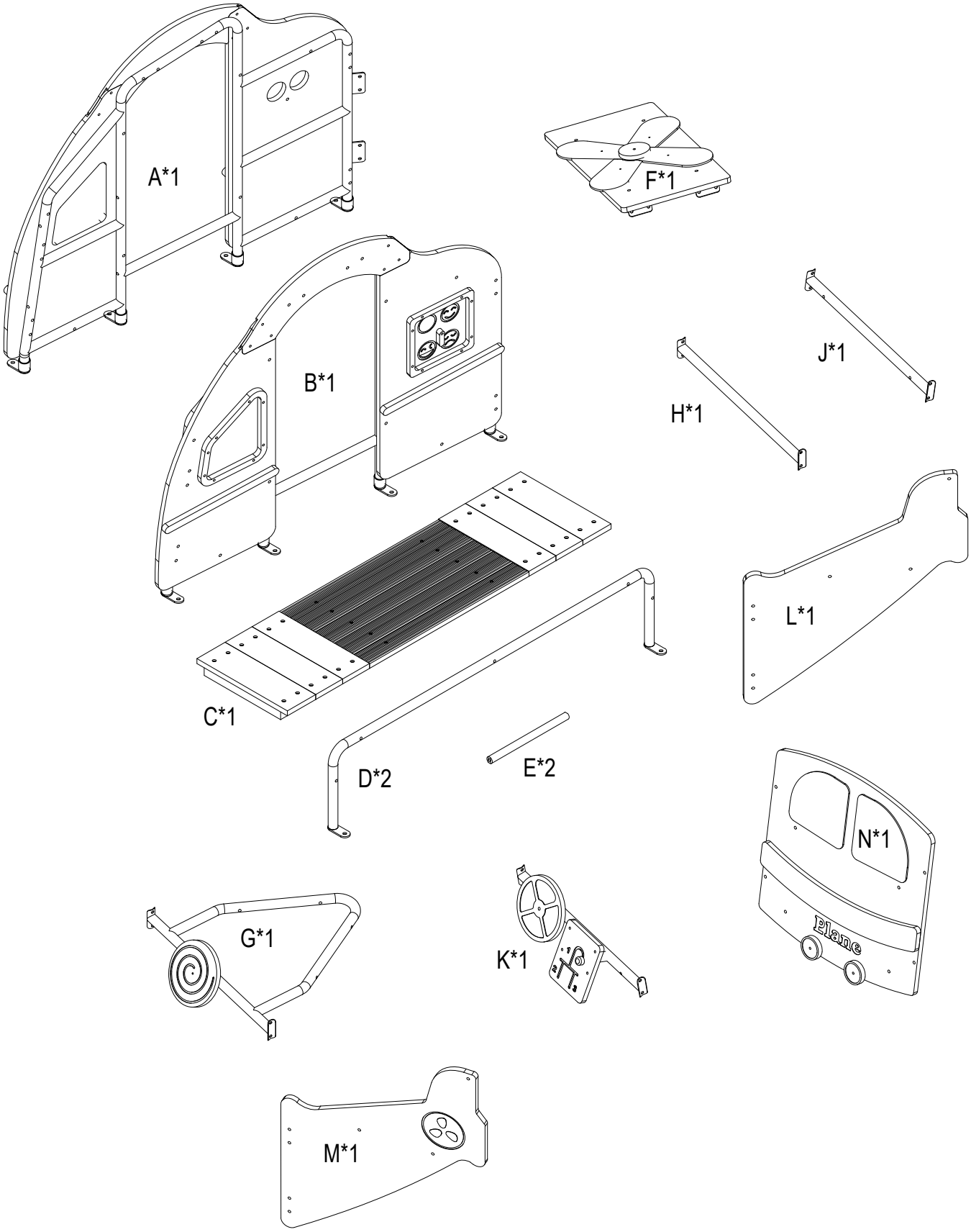

Installation steps：

Locate the parts with corresponding code number in position as shown. Align the holes and lock the corresponding hardware.

YJ001367 Sky Copter Sam			
Number	Name	Model	Quantity
1	TAMPER RESISTANT TORX-BOLT	M8*50	4
2	FLAT WASHER	8.5/23.5*T1.5	6
3	LOCK NUT	M8	6
4	TAMPER RESISTANT TORX-BOLT	M8*75	6

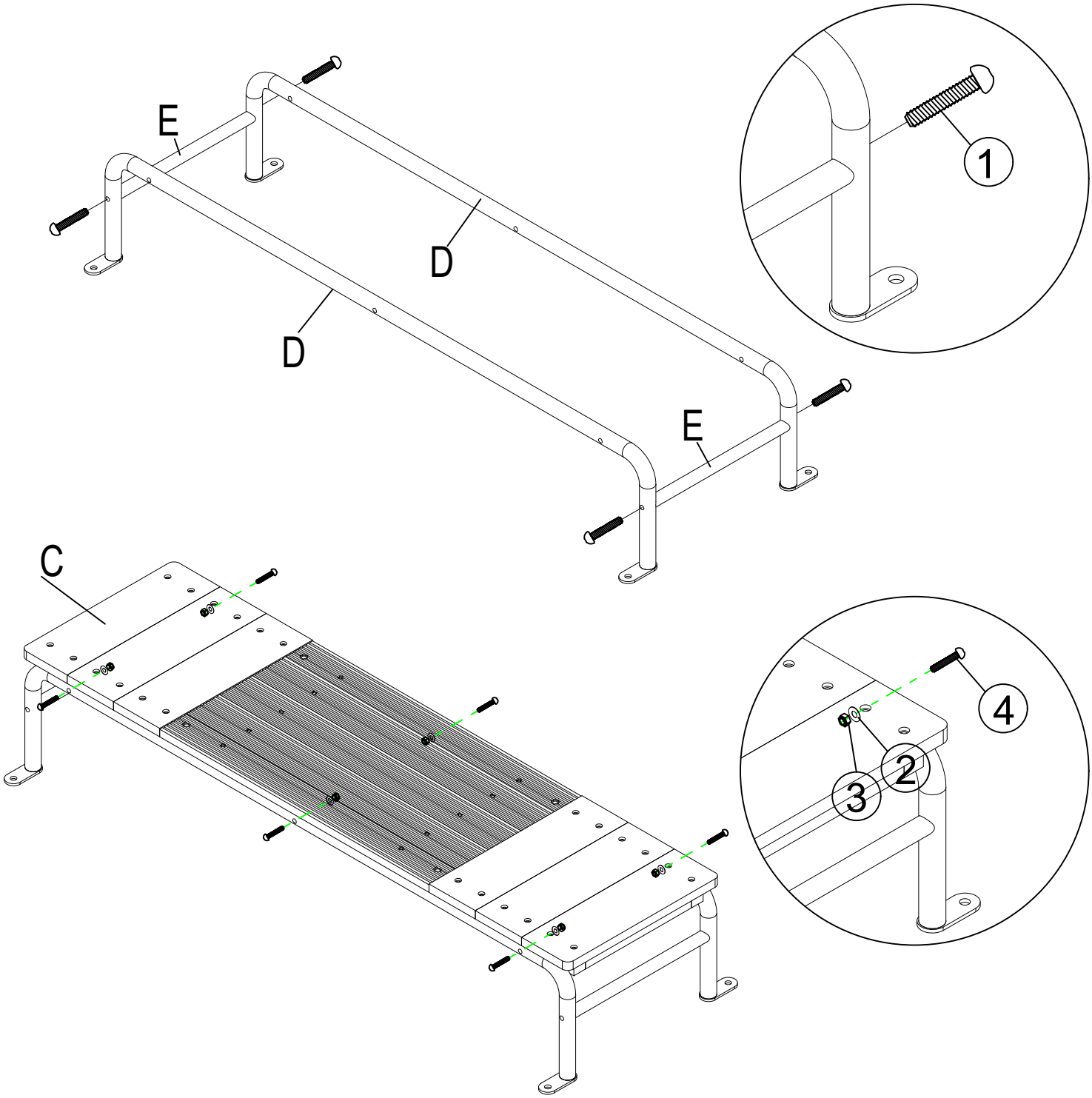

Installation steps：

Locate the parts with corresponding code number in position as shown. Align the holes and insert the corresponding hardware but do not tighten.

YJ001367 Sky Copter Sam			
Number	Name	Model	Quantity
1	TAMPER RESISTANT TORX-BOLT	M8*85	4
2	FLAT WASHER	8.5/23.5*T1.5	4
3	LOCK NUT	M8	4

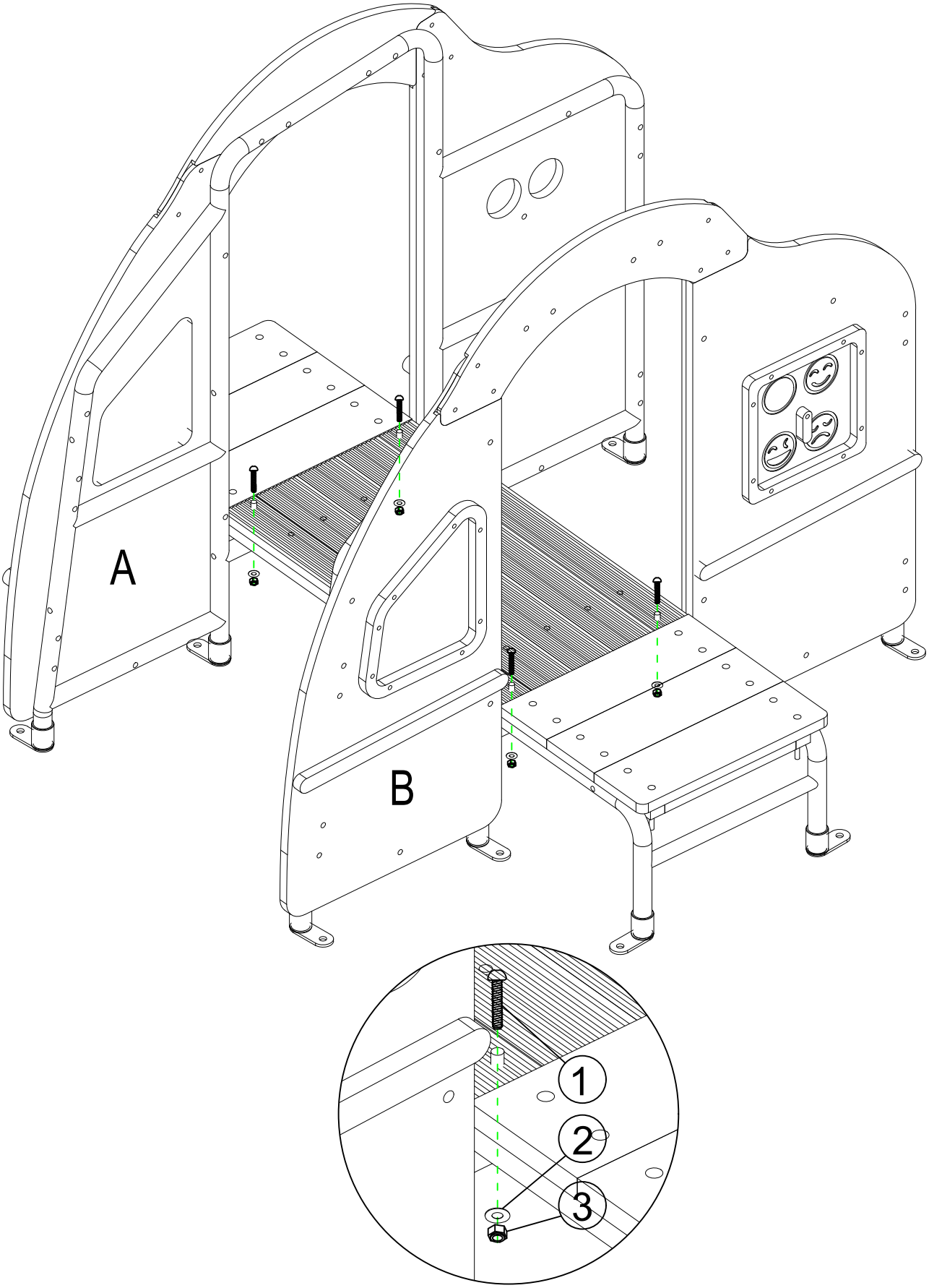

Installation steps：

Locate the parts with corresponding code number in position as shown. Align the holes and insert the corresponding hardware but do not tighten.

YJ001367 Sky Copter Sam			
Number	Name	Model	Quantity
1	TAMPER RESISTANT TORX-BOLT	M8*70	16
2	FLAT WASHER	8.5/23.5*T1.5	16
3	LOCK NUT	M8	16
4	PLASTIC CAP	φ34*M10	16

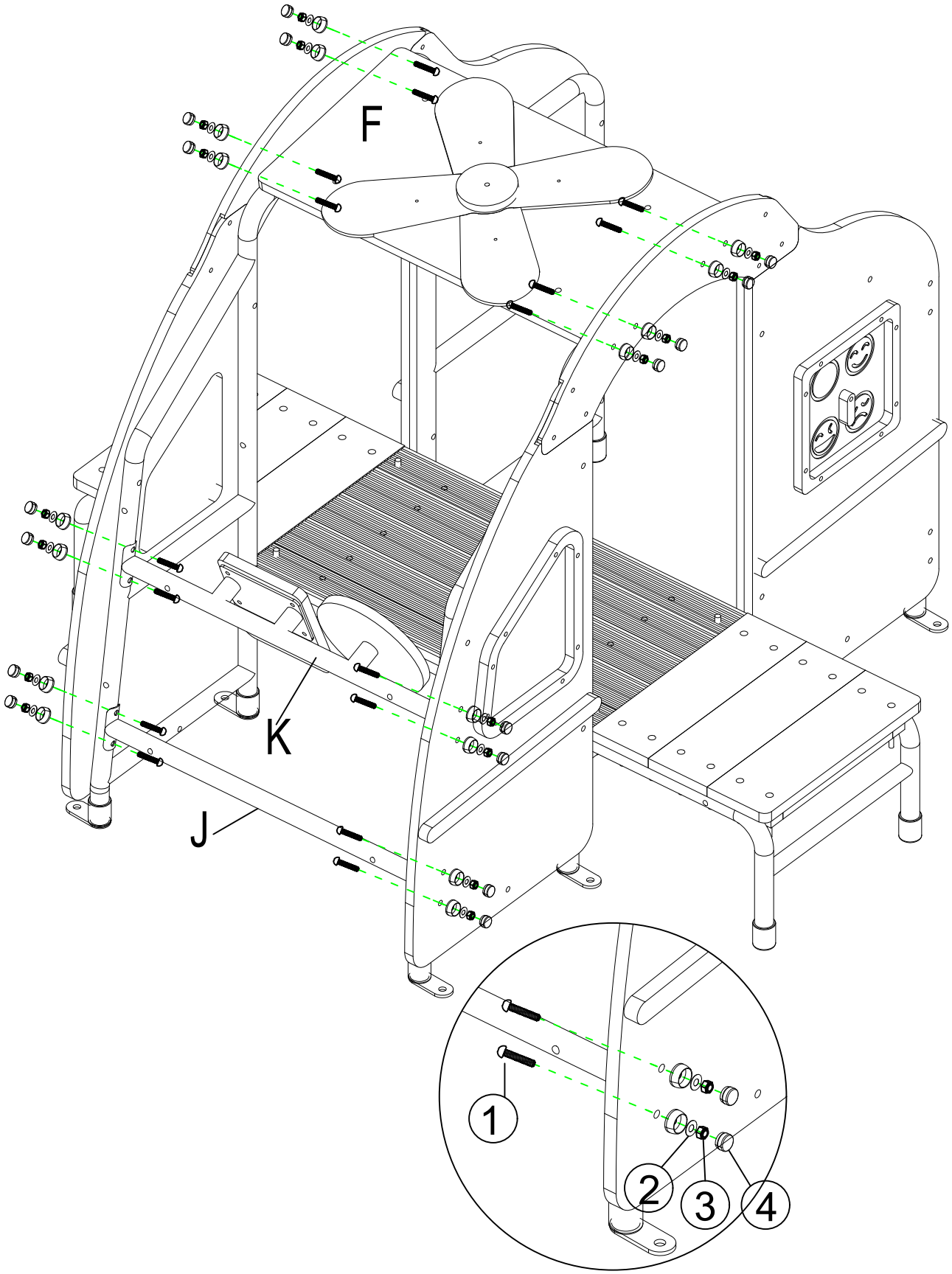

Installation steps：

Locate the parts with corresponding code number in position as shown. Align the holes and insert the corresponding hardware but do not tighten.

YJ001367 Sky Copter Sam			
Number	Name	Model	Quantity
1	TAMPER RESISTANT TORX-BOLT	M8*60	8
2	FLAT WASHER	8.5/23.5*T1.5	8
3	LOCK NUT	M8	8

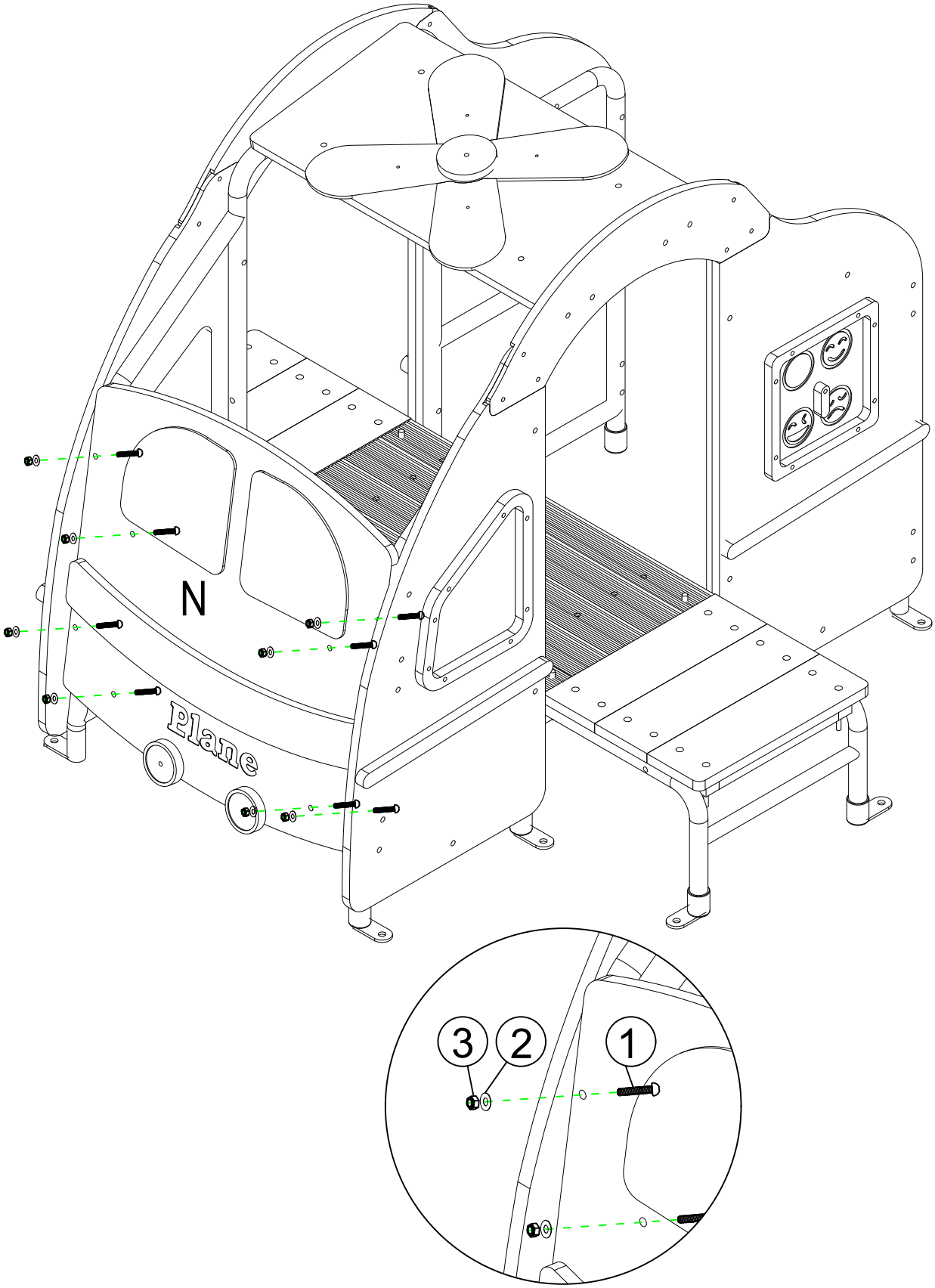

Installation steps：

Locate the parts with corresponding code number in position as shown. Align the holes and lock the corresponding hardware.

YJ001367 Sky Copter Sam			
Number	Name	Model	Quantity
1	TAMPER RESISTANT TORX-BOLT	M8*70	8
2	FLAT WASHER	8.5/23.5*T1.5	8
3	LOCK NUT	M8	8
4	PLASTIC CAP	φ34*M10	8

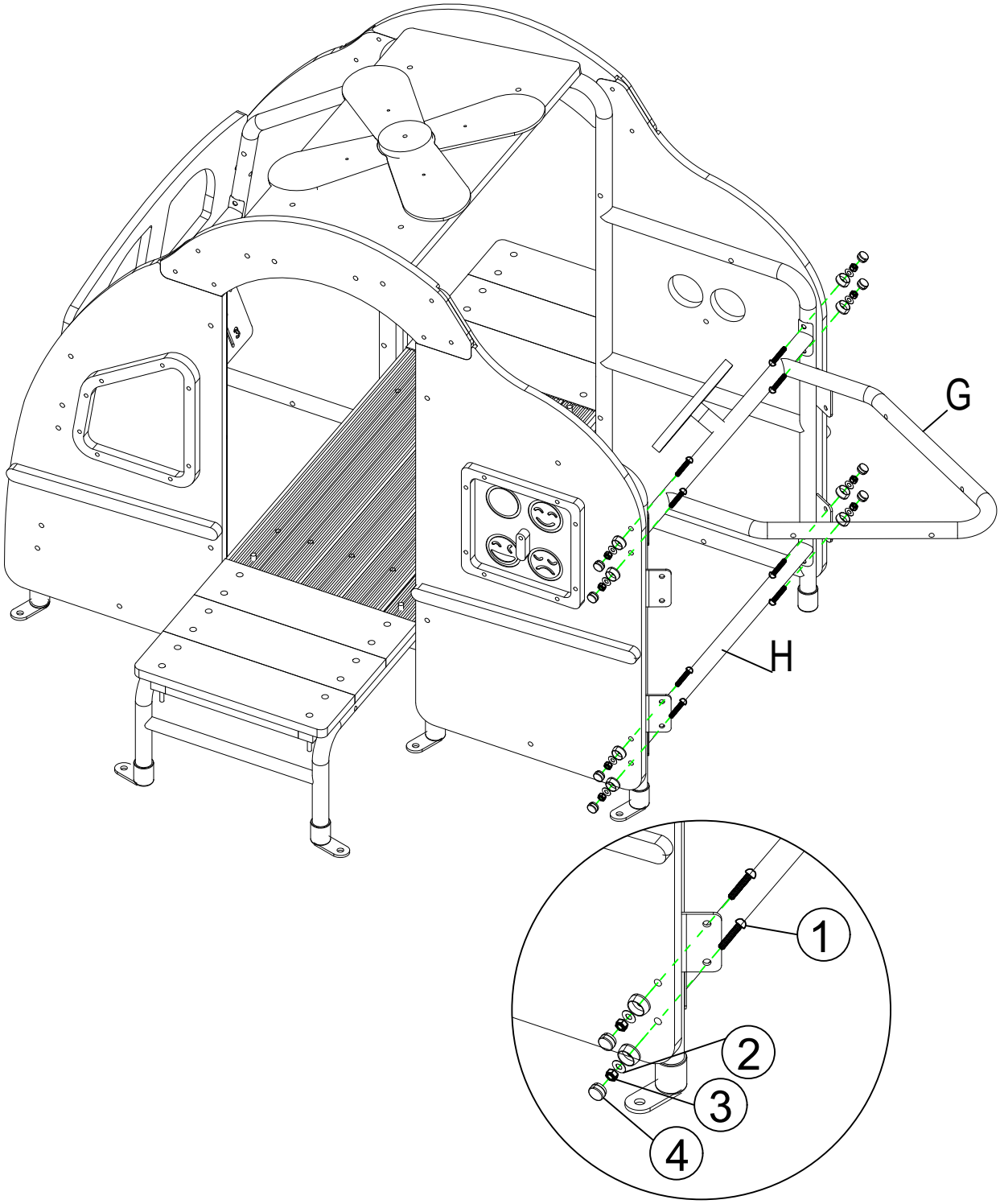

Installation steps：

Locate the parts with corresponding code number in position as shown. Align the holes and lock the corresponding hardware.

YJ001367 Sky Copter Sam			
Number	Name	Model	Quantity
1	TAMPER RESISTANT TORX-BOLT	M8*40	8
2	FLAT WASHER	8.5/23.5*T1.5	8
3	LOCK NUT	M8	8
4	PLASTIC CAP	φ34*M10	8

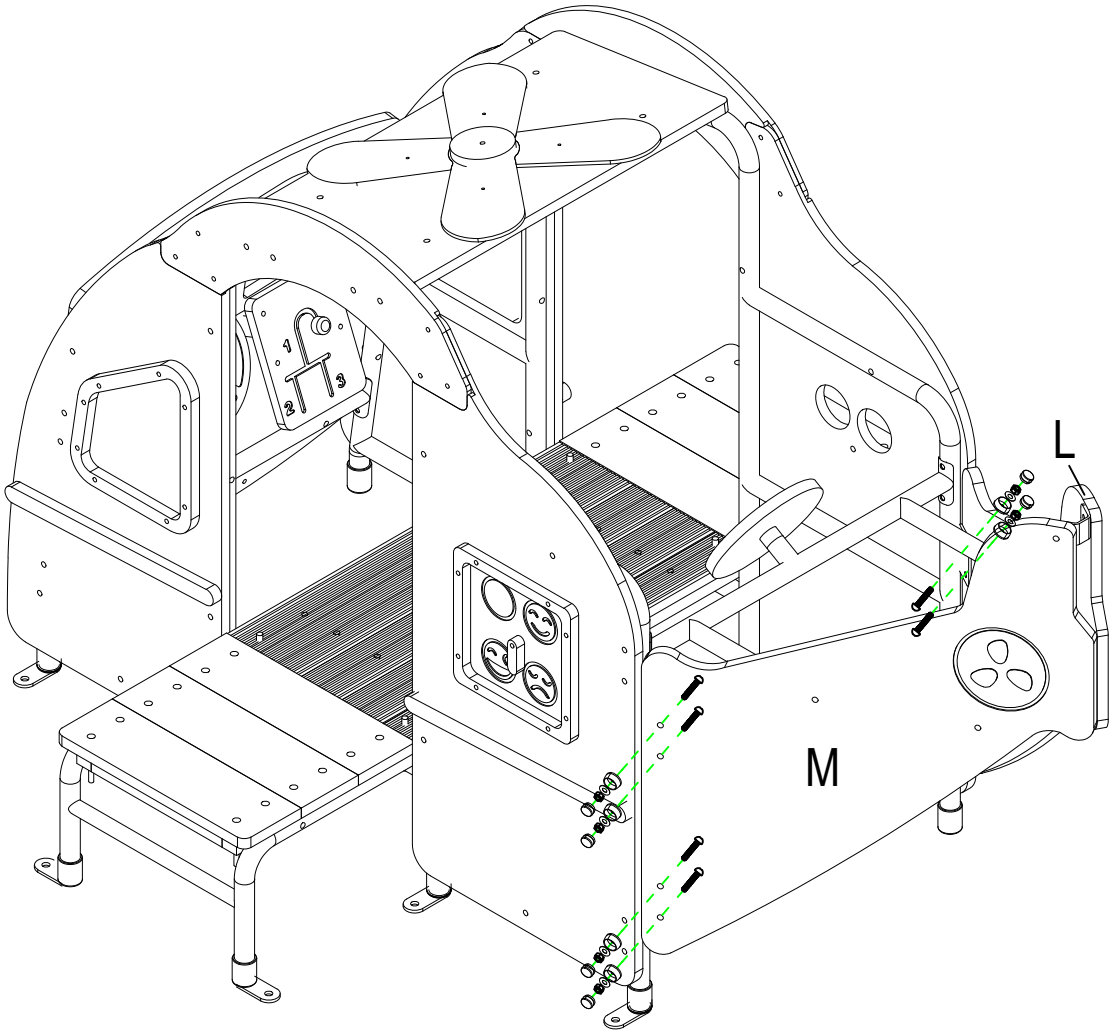

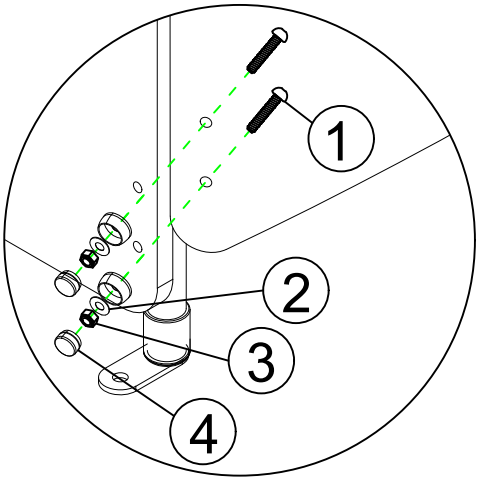

Installation steps：

YJ001367 Sky Copter Sam			
Number	Name	Model	Quantity
1	TAMPER RESISTANT TORX-BOLT	M8*40	2
2	FLAT WASHER	8.5/23.5*T1.5	8
3	LOCK NUT	M8	6
4	PLASTIC CAP	φ34*M10	6
5	TAMPER RESISTANT TORX-BOLT	M8*65	4
6	Stainless Steel Brace is 90 degrees		1

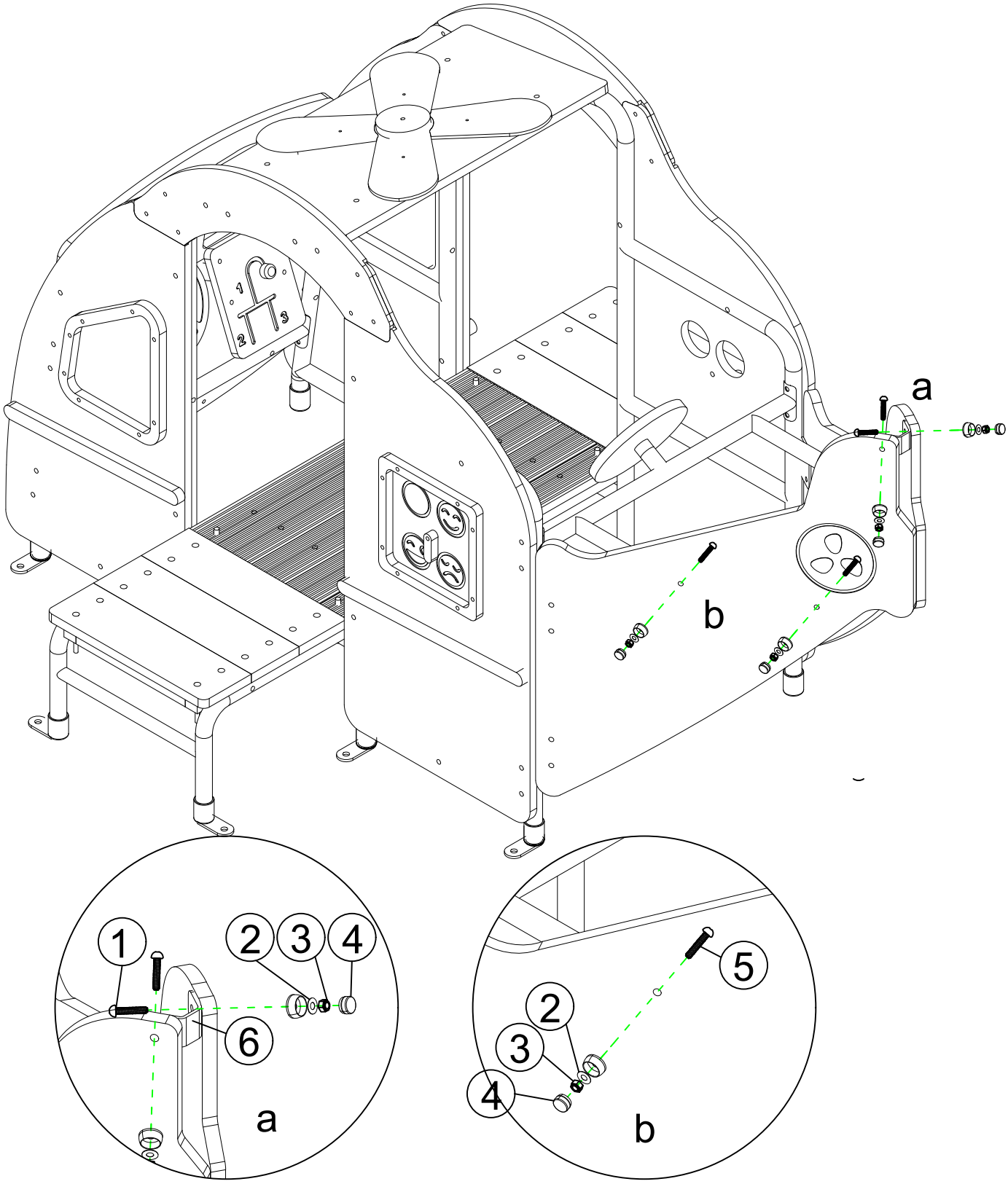

Installation steps：

Installation of Inground Mount reference:

YJ001367 Sky Copter Sam			
Number	Name	Model	Quantity
1	TAMPER RESISTANT TORX-BOLT	M8*25	12
2	FLAT WASHER	8.5/23.5*T1.5	24
3	LOCK NUT	M8	12

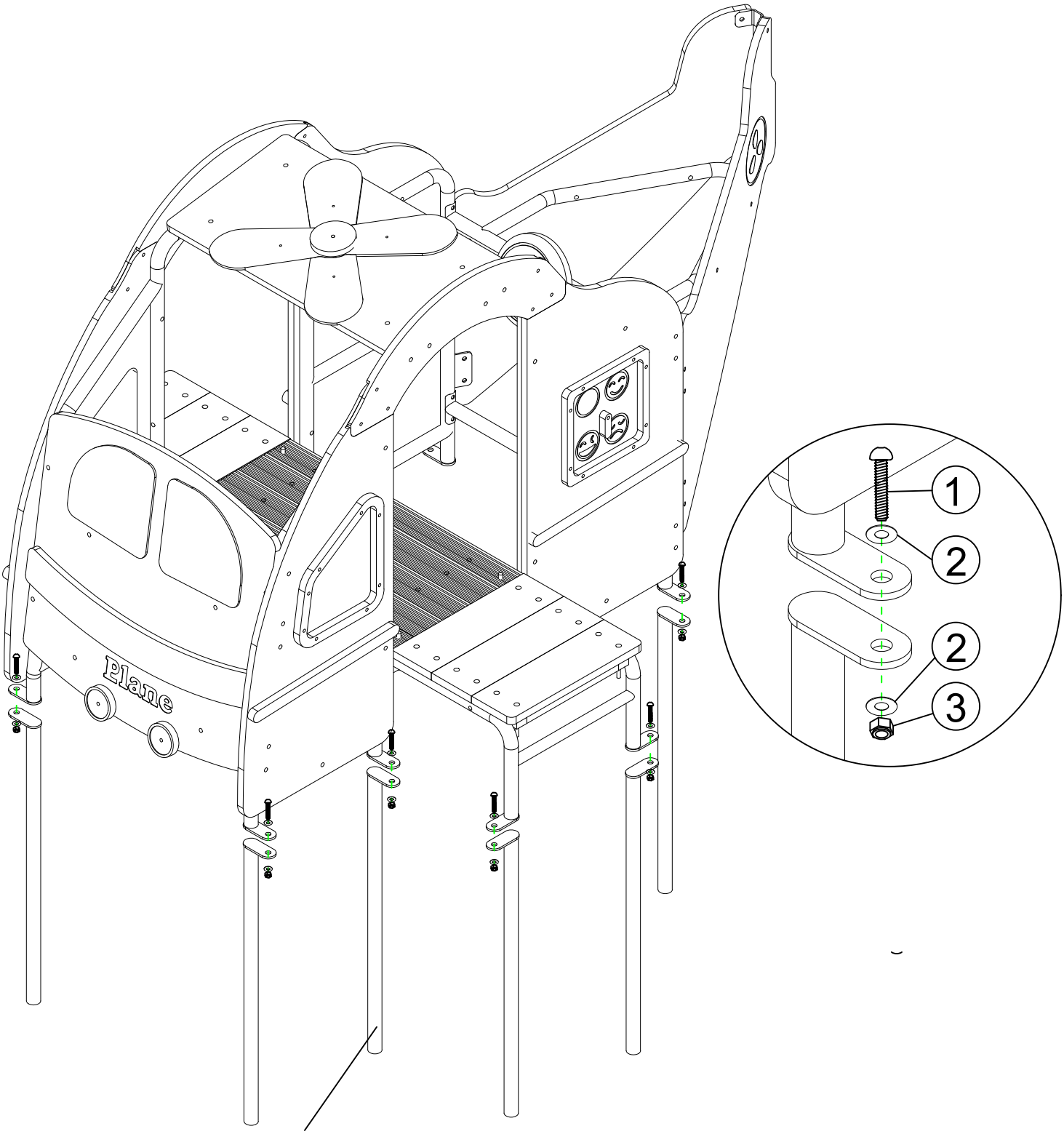

Inground Footer*12

Inground footers needs to be purchased seperately

Installation steps：

Installation of Surface Mount reference:
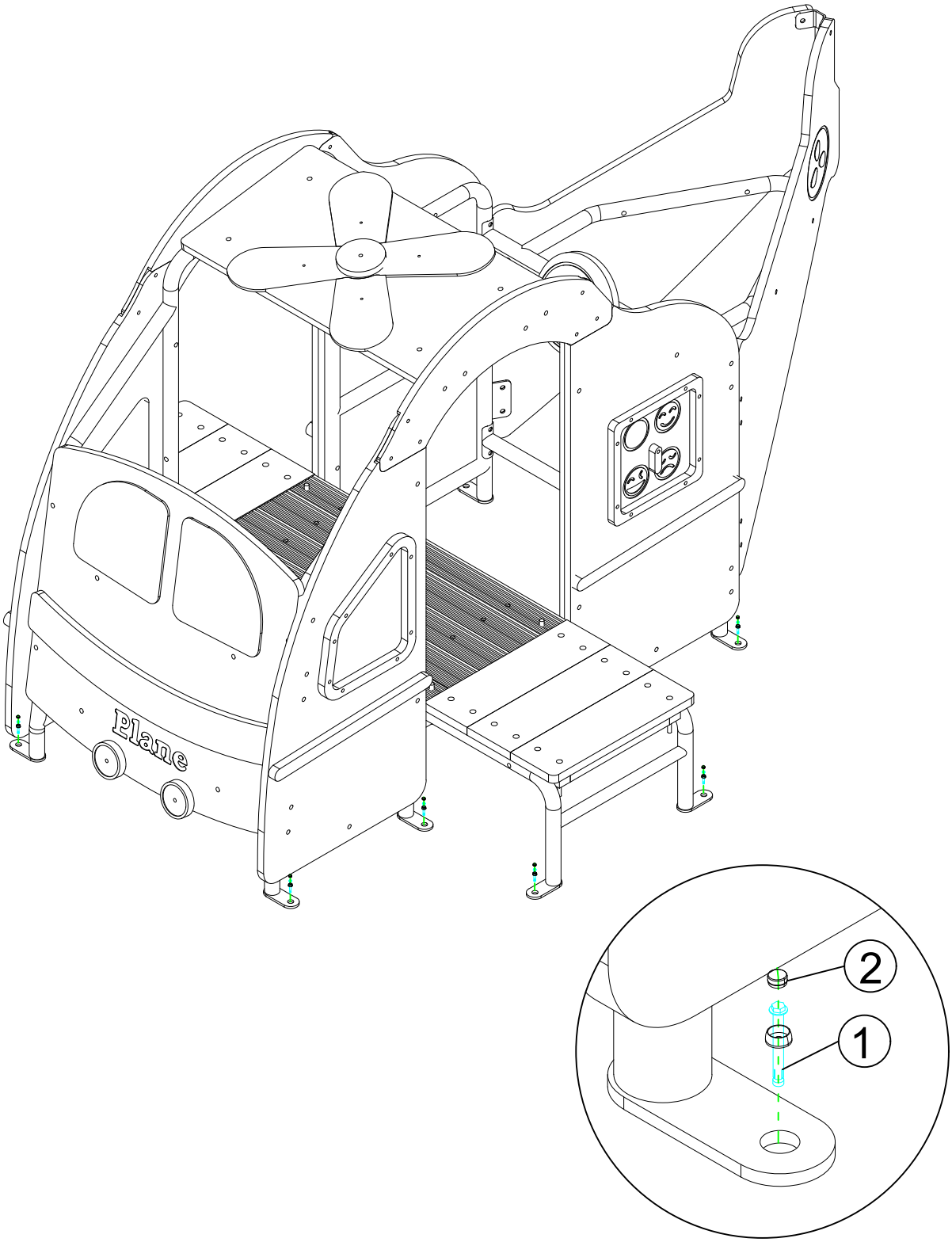
YJ001367 Sky Copter Sam			
Number	Name	Model	Quantity
1	M8*100 Expansion Bolt	M8*100	12
2	PLASTIC CAP	φ34*M10	12