uPLAY TODAY

BIGHORN

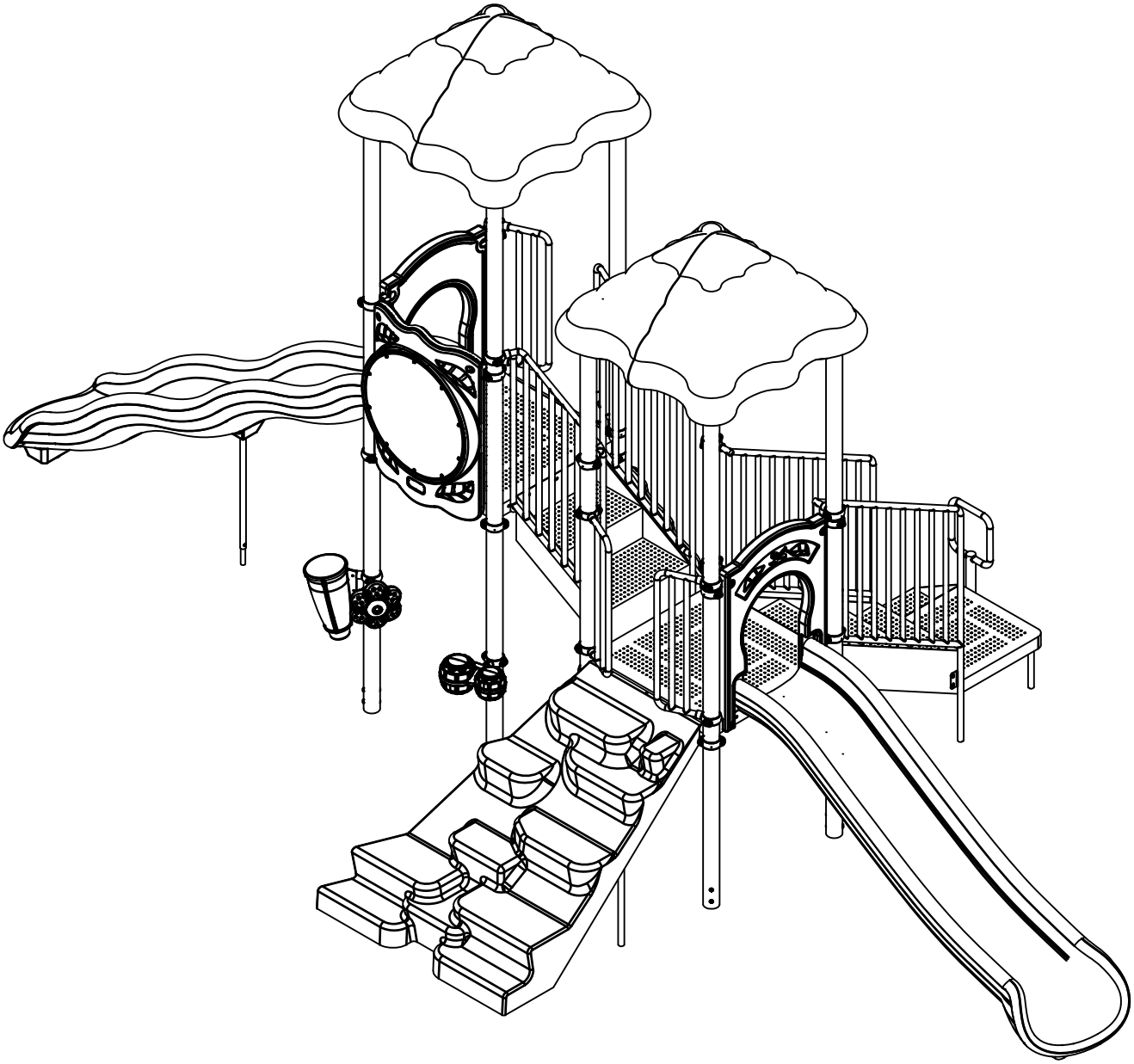

MODEL # UPLAY-008-N
MODEL # UPLAY-008-P

Issued/Revised: 10/13/15

BIGHORN

Dear UPlayToday™ Customer,

Thank you for choosing to purchase and install a UPlayToday commercial playsystem by UltraPlay®. We appreciate the confidence you have placed in our company, and we will strive to earn your trust.

This is your Owner's Manual & Assembly Instructions booklet. We have designed this manual specifically for the products that you have purchased. Included in this manual you will find the following:

-Maintenance schedule & record
-Safety guidelines
-Warranty information
-Product installation instructions
-2D top view drawings
-Ground plan

Please save this booklet for future reference.

The first several pages of this booklet contain important and valuable information regarding the general placement, installation and safety practices common to commercial play equipment. Please read this information carefully and use your best judgment as to how these guidelines apply to your specific situation.

If you have any questions concerning your new equipment, you can contact a UPlayToday Customer Service Representative at 1-800-458-5872 or reach them electronically by sending an e-mail to: **customerservice@ultraplay.com**.

To register your equipment and activate your warranty, please go to ***www.ultraplay.com*** within 30 days of delivery. This will allow UltraPlay to have a record of your purchase in case of warranty claims.

For more information on UPlayToday and UltraPlay products, please do not hesitate to give us a call or visit ultraplay.com.

Thank you for your business; we look forward to working with you on all of your future playground equipment projects!

Sincerely,

UPlayToday by UltraPlay
A PlayCore® Company

GENERAL COMMERCIAL PLAYGROUND SAFETY GUIDELINES

Maintaining your playground equipment and its surrounding area is essential to minimizing the risk of injury to users as well as maximizing its useful lifespan. UPlayToday STRONGLY recommends that you follow these Safety Guidelines in conjunction with conducting periodic maintenance inspections using the accompanying *Playground Maintenance Checklist.*

When installing your playground, always consider local conditions. Good common sense works hand-in-hand with the instructions.

LOCATING YOUR PLAY STRUCTURE:

Comply with the following when choosing the location for your new equipment: Equipment shall be positioned to eliminate conflicting traffic patterns. As a general rule, allow at least 72" of free space around the entire structure, EXCEPT for slide exits, which require a distance X equal to the highest point of the sliding surface with a minimum of 72" and maximum of 96" from the edge of the slide. (example: a Wave Slide from a 72" deck requires 72" of clear space with resilient surfacing in front of its exit.) Swings must have a minimum Use Zone in each direction of twice the swing beam height. This minimum area should be filled with the appropriate resilient surface material. Read further for resilient surfacing recommendations.

If your equipment includes any metal slides, they should be positioned in a shaded area, or at least be placed to avoid the direct rays of the sun.

Never overlap the safety zones of adjacent equipment. All separate play equipment must have its own safety zone, and these cannot overlap. So, if you have an existing structure with a slide exit oriented toward your new one, add a minimum safety zone to that of the existing slide to determine how far away you need to be. Never install playground equipment near, around, or in conjunction with swimming pools, ponds, lakes, or any other bodies of water.

CHOOSING RESILIENT SURFACE MATERIAL:

NEVER INSTALL EQUIPMENT ON CONCRETE, ASPHALT OR EVEN GRASS WITHOUT RESILIENT SURFACING! A fall on a hard surface from as low as a 36" high deck has been found to result in serious injury to the user.

According to ASTM guidelines: "Unacceptable material for use zones of play structures with fall heights of 18" or less shall include all hard or abrasive materials such as asphalt, concrete, terrazzo, or other materials with similar characteristics. "Other standards apply for equipment with fall heights greater than 18".

Soft, resilient surfacing should be placed in the use zones of all equipment, as specified for each type of equipment, and at depths to meet the critical fall heights as specified by the U.S. Consumer Product Safety Commission, ASTM standard F-1487 and Canadian Standard CAN/CSA-Z-614. **Your UPlayToday structure has a maximum fall height of 72".**

GENERAL COMMERCIAL PLAYGROUND SAFETY GUIDELINES

Install Wood Mulch (EWF) at a depth of 12". Over time this mulch will compress to a depth of 9" as required by the U.S. Consumer Product Safery Commission, ASTM standard F-1487 and Canadian Standard CAN/CSA-Z-614. For more information on the proper surfacing materials, call the CPSC hotline at 1-800-638-2772.

Worn surfaces around equipment should be restored. Concrete footings should never be exposed. Refer to the attached PLAYGROUND MAINTENANCE CHECKLIST.

Check for erosion and cratering of surfaces under slides and heavy traffic areas and restore surfacing as necessary.

Surfacing leading to play opportunities for children with disabilities should be firm, stable, slip resistant, and resilient.

Tip: If your surfacing is of the loose variety, checking for proper depth over time can be made easy by applying a non-removable fluorescent tape of paint in a bright color at the proper level on each upright post. Thereafter, as the resilient material compacts or washes away, the person responsible for regular maintenance inspections can easily see it must be replenished as the marks become visible.

OVERHEAD OBSTRUCTIONS:

Overhead obstructions (for example, exterior obstructions such as tree limbs and interior lights) within the use zones of play structures shall be a minimum 84" (2130 mm) above each designated play surface outdoors and a minimum of 48" (1220 mm) above each designated play surface indoors.

All overhead utility line clearances above outdoor supervised and outdoor unlimited access settings shall comply with all local, state, and national codes, such as the National Electrical Safety Code. For specific equipment fall zone requirements, refer to the CPSC and ASTM F1487 and use the more stringent of the two.

CATCH POINT & PROTRUDING HARDWARE:

There should be no dangerous pieces of hardware, such as protruding bolt ends and narrow gaps in metal connections. Exposed hardware can cut or puncture skin and catch clothing drawstrings, which could strangle a child.

All protruding nuts and bolts should be eliminated; sharp edges on pipes should be capped or removed. Check for bent, broken, or severely worn pipe and replace. Examine slide bedways, bedrails, handrails and exits for foreign objects, holes, and rough edges.

GENERAL COMMERCIAL PLAYGROUND SAFETY GUIDELINES

TRIPPING HAZARDS:

There should be no exposed concrete footings, abrupt changes in surface elevations, tree roots, tree stumps, and rocks, which can trip children and adults. Check for trip hazards, such as the balance beam support posts, or environmental trip hazards, such as rocks or roots in the play area. Make all necessary improvements or repairs.

AFTER THE EQUIPMENT IS IN USE:

-Never add components not intended for use with this product.

-Never install other play equipment, fencing, landscaping, etc., that encroach upon the safety zones of this equipment.

-Check overall stability and rigidity of all play equipment.

-Check for proper assembly, installation and ground anchoring.

-Check and re-tighten all fasteners after the first few days of use and again after three weeks of use. Thereafter, exercise normal maintenance procedures. Use of a thread-locking compound on the threads of bolts can prevent persistent loosening.

ROUTINE MAINTENANCE:

Regularly inspect and maintain your playground equipment and its surrounding area to help ensure the safety of the user. Proper maintenance of UPlayToday equipment includes using the accompanying **Playground Maintenance Checklist** found in this booklet to identify areas requiring repairs or replacement, and barricading the equipment to prevent use while corrections are being made.

As the Owner/Operator of the equipment, you should establish and maintain detailed installation, inspection, maintenance, and repair records for each public-use playground equipment area. Find out if your playground has a designated official who periodically inspects the play equipment for preventative maintenance. This includes but is not limited to: replacing missing, broken or worn-out components; securing hardware; checking for deterioration in the metal or plastic materials; maintaining the proper depth of surfacing material; and cleaning up debris.

The following are some regular maintenance areas of note:

-Check for and repair damage caused by wear or vandalism, a major factor in injury causing situations.

Continued on next page

GENERAL COMMERCIAL PLAYGROUND SAFETY GUIDELINES

-Proper maintenance of UPlayToday equipment requires regular tightening of all bolts, nuts, set screws, and other hardware.

-All equipment should be free of rust and repainted with an appropriate lead-free paint whenever necessary to deter rusting. This should also be done for any chipped or peeling areas.

-Regular checking of all parts, casting, etc., should be made. If part is broken or worn it should be replaced immediately.

-Check for missing or broken parts, rungs, or steps and repair as necessary.

-Check to be sure there is free movement on moving attached parts.

-Check for hard surfaces and correct, including under slides and etc. where loose surfacing may have been kicked away. *Refer to CPSC surfacing requirements.*

-Check for surfacing material that is worn or scattered and restore.

-Debris, broken glass, trash, or other foreign objects within or on the play area/equipment should be removed.

-Check for poor drainage areas and repair.

-Check concrete footings to see if they are exposed, cracked, or loose in the ground and repair as necessary.

-Check for crush points (exposed mechanisms, junctures of moving components) and eliminate.

-Check for broken supports or anchors. Check for stability in ground. Structures should not be easily swayed; connections should be solid and adequately secured.

-Check all posts in ground for corrosion or rot below grade.

-When flexible components are anchored in the ground, check and make sure anchoring devices are below the level of the playground.

-Check exit areas of slides. The exit area should be no more than 11" from the protective surface for slides under 48" high. For slides over 48" high, the height of the exit region from the surface should be between 7" and 15".

-Check the surface area around slide exit for erosion and other damage and repair if necessary.

-Check for visible cracks, bending, warping, rusting, or breakage of any component and repair as needed.

GENERAL COMMERCIAL PLAYGROUND SAFETY GUIDELINES

-Check for accessible sharp edges or points. Check for protruding bars, bolts, nuts, etc. Eliminate these conditions.

-Check for exposed ends of tubing that should be covered with plugs or caps.

-Check for loose bolts, nuts, etc. and tighten.

-Check for broken or missing rails, steps, rungs, or seats and replace.

MAINTENANCE CHECKLIST

ultraPLAY
A PLAYCORE Company

Maintaining your playground equipment as well as its surrounding area is essential to minimizing the risk of injury to users as well as maximizing its useful lifespan. UltraPlay recommends the following maintenance prodedures be followed:

On a daily basis: A responsible individual should conduct a brief visual check for structural defects, signs of vandalism and litter of foreign matter that needs to be removed.

On a weekly basis: A responsible individual should complete this checklist. Any required repairs should be detailed on the separate **Detailed Maintenance Record**, and once they are completed, both should be filed for future reference. A separate file and form should be kept for each play strucure at each location.

IMPORTANT: Always refer to - and comply with - the separate Safety Guidelines and ASTM and CPSC Guidelines. The play structure(s) should be barricaded so that it cannot be used while repairs are being completed.

	Item to be Checked (use the following page to record a breif description of the necessary repairs)	OK	Repairs Required	Date Repaired
A.	Play Structures in General			
	1. Post and component footings are not exposed, cracked or loose			
	2. Welds are intact and free of cracks			
	3. No rust or corrosion			
	4. No splintered, cracked, gouged or otherwise deteriorated plasics; check for integrity of the plastic, keep plastic clean of any extraneous substances, verify that any deformation does not create entrapment as specifed on ASTM-F-2373.			
	5. No scratched, chipped or peeling paint			
	6. Metal parts show no visible cracks, bending, warping or breakage			
	7. No missing bolts, nuts, etc.			
	8. All bolts, nuts and fasteners are tight			
	9. All joints are secure (pay special attention to flush-mounted decks and pipe connections)			
	10. No broken or missing parts			
	11. No sharp edges or unsafe protrusions (check metal corners, bolts, etc.)			
	12. No exposed mechanisms, junctions of moving parts or components that will pose possible pinch or crush points			
B.	Play Events			
	1. Plastic is not cut or cracked			
C.	Surrounding Area			
	1. Resilient surfacing material is not scattered or excessively worn			
	2. Resilient surfacing material is adequately deep and retains its fall absorbing abilities as specified at time of installation			
	3. Border around playground is in good condition and has not come loose			
	4. No roots, rocks or other objects that may cause a tripping or injury hazard			
	5. Area is clean of litter (no broken glass or bottles, etc.)			

DETAILED MAINTENANCE RECORD

ultraPLAY
A PLAYCORE Company

Play Area Site Name _____

Play Area Location or Description _____

Date _____ Inspector _____

Item Number	OK	Problem	Solution	Date Repaired	Initials

ultraPLAY

A PLAYCORE Company

UPlay Today™ Limited Warranties

Ten Years

Upright Posts: Materials & Workmanship

Five Years

Metal & Ground Mount Metal Parts: Materials & Workmanship

One Year

All Products: Materials & Workmanship

All warranties specifically exclude damage caused by man-made or natural disasters, vandalism, negligence, improper installation or improper use, modification, changes in appearance resulting from weathering, scratches, dents, discoloration, normal wear and tear, or marring as a result of public or private use.

Claims are limited to replacement of equipment only and do not include any costs associated with labor, removal or installation of the original or replacement product.

Warranties are valid only if products are installed and maintained in accordance with UltraPlay installation instructions and use of approved parts.

UPlayToday Warranty

UltraPlay warrants its products to be free from defects in materials and/or workmanship, subject to normal usage and installation, for a period of 1-year from the date of shipment to the original purchaser. In the event of a claim under this warranty, UltraPlay will replace the component at no cost within the first 12 months from date of shipment to the original customer. Equipment not specifically addressed in the following paragraphs is also subject to this limited 1 year warranty against defects in materials and/or workmanship.

TEN-YEAR LIMITED WARRANTY ON UPRIGHT POSTS
UltraPlay provides a limited warranty on metal upright posts to be free from defects in materials or workmanship against structural failure which causes the product to become unfit for its intended use, subject to normal usage and installation, for a period of 10 years from the date of shipment to the original customer.

FIVE-YEAR LIMITED WARRANTY ON METAL PARTS
UltraPlay provides a limited warranty on metal decks, steps, stairs, rails, pipes, support posts, rungs, loops, and clamps to be free from defects in materials or workmanship against structural failure which causes the product to become unfit for its intended use, subject to normal usage and installation, for a period of 5 years from the date of shipment to the original customer.

FIVE-YEAR LIMITED WARRANTY ON GROUND-MOUNT METAL PARTS
UltraPlay provides a limited warranty on metal footers, inground footers, surface mount plates, ground spikes, slide and climber mounting posts and plates to be free from defects in materials or workmanship against structural failure which causes the product to become unfit for its intended use, subject to normal usage and installation, for a period of 5 years from the date of shipment to the original customer.

THREE-YEAR LIMITED WARRANTY ON PLASTIC PARTS
UltraPlay provides a limited warranty on the following plastic parts: slides, climbers, roofs, tunnels, bridges, panels, and border timbers. These components are warranted to be free from defects in material or workmanship, subject to normal usage and installation, for a period of 3 years from the date of shipment to the original customer.

ONE-YEAR LIMITED WARRANTY ON HARDWARE
UltraPlay Systems provides a limited warranty on hardware to be free from defects in materials or workmanship against structural failure due to breaking or shearing, subject to normal usage and installation, for a period of 1 year from the date of shipment to the original customer.

ONE-YEAR LIMITED WARRANTY ON HDPE CLIMBER
UltraPlay provides a limited warranty on high density polyethylene (HDPE) climber against degradation for a period of 1 year from the date of shipment to the original customer.

WARRANTY EXCLUSIONS

All warranties specifically exclude damage caused by man-made or natural disasters, vandalism, negligence, improper installation or improper use, modification, changes in appearance resulting from weathering, scratches, dents, discoloration, normal wear and tear, or marring as a result of public or private use.

Claims are limited to replacement of equipment only and do not include any costs associated with labor, removal, or installation of the original or replacement product.

Warranties are valid only if products are installed and maintained in accordance with UltraPlay installation instructions and use of approved parts.

This warranty is applicable to the original owner only. Warranties are non-transferable.

Claim Procedure: To make a warranty claim, send your written statement of claim, photographs of defective equipment, and the original purchase invoice or invoice number to:

UPlayToday
Customer Service
1675 Locust Street
Red Bud, IL 62278

Or Contact a Customer Service Representative at: **1-800-458-5872**

Within 60 days of notice of claim under warranty, UltraPlay will make arrangements to replace the damaged product. UltraPlay will cover freight costs within the continental United States. UltraPlay is not responsible for freight costs associated with products located outside the continental United States. UltraPlay reserves the right to inspect all products identified as defective. Photos of defective equipment may be required to accompany warranty claims.

Since warranty limitations and exclusions may vary from state to state, you should check any specific warranty rights in your state.

Date of Purchase:_____

Purchaser:_____

UltraPlay Invoice Number:_____

_____
Authorized UltraPlay Signature

_____
Title

Visit UltraPlay on the web at www.ultraplay.com

GENERAL INTRODUCTION TO INSTALLATION INSTRUCTIONS

IMPORTANT! Please read the entire Installation Instructions packet before beginning the installation.

UltraPlay has designed UPlayToday to take advantage of all Consumer Product Safety Commission (CPSC) and ASTM guidelines in force at the time of purchase in an effort to prevent playground accidents. However, because studies have shown most playground injuries result from accidental falls, you, as the new owner of this equipment are responsible for providing an acceptable play surface under and around all playground equipment. Please refer to the accompanying Safety Guidelines as well as CPSC guidelines and this document for examples of such surfacing.

We would like to provide the following suggested guidelines for your play environment:

-Refer to the Use Zone and note the Minimum Area required shown for this structure. This area must be filled with acceptable play surface material, and must be clear of all obstacles, including but not limited to trees, curbing, sidewalk, fence, other play equipment, rocks, and landscaping, etc.

-According to ASTM guidelines: "Unacceptable materials for use zones of play structures with fall heights of 18" or less shall include all hard or abrasive materials such as asphalt, concrete, terrazzo, or other materials with similar characteristics." Other standards apply for equipment with fall heights greater than 18".

-Acceptable play surfaces include: sand, mulch, fine gravel or shredded belt-less tires, if installed at the appropriate depths per CPSC guidelines for play surfacing.

-When using sand, mulch, or shredded belt-less tires, a minimum of 6" depth is recommended by the CPSC. UPlayToday recommends an additional 6", for a total of 12", to combat the fast compacting characteristics of these materials. Surfaces must be checked at least weekly for compacting, which reduces resiliency significantly.

-Surfaces such as asphalt, concrete, gravel, or sod are not acceptable for use under playground equipment, or anywhere within the stated Use Zone.

-Unitary resilient surfacing designed for playground use, including rubber tiles, poured-in-place rubber surfacing, bonded rubber surfacing, and synthetic playground turf is also recommended.

-Close supervision of children playing on or around the structure is strongly recommended, along with classroom and/or home instructions on safer behavior on the playground equipment. The full supervision of playgrounds is the responsibility of the owner once the play structure has been properly installed.

Continue on next page

GENERAL INTRODUCTION TO INSTALLATION INSTRUCTIONS

TOOLS REQUIRED:

UltraPlay supplies only the special wrenches and bits required to fasten the "tamper-resistant" hardware and components. You will need common wrenches and an Allen key set as well as a drill, string line, level, shovels, post hole digger, pry bar, washable felt tip marker, phillips head screw driver, utility knife, rubber mallet, and a tape measure. A power post hole digger may facilitate installation in some circumstances. Refer to the Tools Required page for a detailed list.

INSTALLATION GUIDELINES:

1. Compare all parts received to the packing list. Notify UltraPlay immediately of any missing parts. We are not responsible for parts discovered missing over 10 days after receipt of the shipment.

2. Refer to the Use Zone to ensure this structure will fit into your actual site area. Note the Minimum Area Required measurements to determine clear space required. A minimum of 72" clearance is required between any obstacles and your structure. EXCEPT for slide exits, which require a distiance X equal to the highest point of sliding surface with a minimum of 72" and a maximum of 96" from the edge of the slide (example: A Wave Slide from a 72" high deck requires 72" of clear space with resilient surfacing in front of its exit).

3. Site selection should include considerations of what is a safe and appropriate play area:
   -A level and clear site is ideal, free of power lines or electrical equipment.
   -Do not install play equipment near any bodies of water.
   -If adjacent to a street with traffic, ensure adequate fencing acts as a barrier to children running into danger.

4. Site layout should include accurate measurement and marking of all footings prior to any installation. Use the dimensions shown between footings on the Use Zone to plot out the actual footprint of the play structure before doing any digging. Also locate any freestanding play equipment in the same way, providing the necessary clearance between the equipment as well as any fences, trees, etc. Ensure at this time you have enough total space for the equipment to be installed.

5. If using inground footers, excavate holes as shown in the Use Zone using a string line. An optional string line level is very helpful. If a level and clear site is not possible, adjust the depth of the footings to maintain a minimum depth of 18" for support posts at the lowest grade. NOTE: If soil conditions are very loose or otherwise unstable, a larger diameter footing may be required. Inquire with local contractors for appropriate recommendations.

6. Begin your UPlayToday installation by erecting the decks as shown within the following instructions. Once all decks are installed, components such as slides, climbers, etc., can be connected per their respective assembly instructions. Note that connecting components between decks such as Crawl Tunnels and Bone Bridges should be installed concurrently with the decks to ensure they are accurate.

GENERAL INTRODUCTION TO INSTALLATION INSTRUCTIONS

7. CPSC guidelines mandate that there shall be no gaps present in the playground equipment that fall between 3-1/2" and 9". The positioning of certain components by the installer can affect this criteria, so you should always measure distances created when attaching components in order to avoid these spaces which can cause entrapment of a child using the equipment. Also, ASTM requires that no more than 2 threads of a bolt can protrude from the nut. Any excess threads should be filed down and made smooth to the touch.

8. When concrete is poured, be sure to keep the top 4" below grade, and sloped away from the post to promote good water drainage. Wash off any concrete that may have splashed onto the post before it dries. Allow all concrete to harden a minimum of 48 hours before allowing use.

SAFETY DURING INSTALLATION:

1. Before doing any excavation, inquire about any existing underground utilities.

2. Do not leave the job site unattended without making sure that all fastening hardware on all equipment is tightened and all drive rivets are in place to prevent clamps from moving, in case of unauthorized use. UPlayToday CLAMPS ARE NOT DESIGNED TO SUPPORT HUMAN WEIGHT WITHOUT THE DRIVE RIVETS INSTALLED, AND SUCH USE COULD CAUSE INJURY TO THE USER AND/OR DAMAGE TO THE EQUIPMENT. It is also strongly recommended that all installation areas be roped off with clearly marked warning signs posted. Any open footings should be covered with plywood or other suitable material. Even during installation, it has been found that children will use the unattended equipment, thereby risking accidents.

3. If concrete footings and inground footers are being used, it is strongly recommended that the installation area should remain roped off for at least 48 hours after the last concrete footing is poured. Children should not be allowed to use the equipment during this period so that concrete has a chance to fully cure.

Finally, if you should have any questions regarding the proper installation of this equipment, please contact UltraPlay at:

UPlayToday Customer Service
1675 Locust Street, Red Bud, IL 62278
1-800-458-5872 Fax 1-618-282-8202
Email: customerservice@uplaytoday.com

WARNING LABEL APPLICATION INSTRUCTIONS

The enclosed Warning Labels must be affixed to your playground equipment. At least one Warning Label is needed per play structure, permanently affixed in a conspicuous location within easy view of users.

INSTRUCTIONS:

1. Fully assemble and install your UPlayToday playground equipment per the accompying installatioin instructions.

2. When installation of the equipment is complete, and prior to allowing use of the equipment, identify a suitable location on the structure to receive the Warning Label. An upright post is recommended, approximately 48" above the ground. Choose an upright post most likely to be seen by the user immediately upon entry into the play area.

3. Fully clean the surface to receive the label with soap and water, and ensure that no oils, film, or dirt remain.

4. Allow surface to dry fully. Apply the Warning Label, smoothing over the surface with a clean cloth so there are no air bubbles present.

5. For larger structures (more than 16 upright posts), use 2 labels, positioning one at each end of the structure. Always choose locations, which are likely to be seen by users prior to use of the equipment, preferably near the entry point of the play area.

ALWAYS FOLLOW THE RECOMMENDATIONS CONTAINED IN THE ACCOMPANYING SAFETY GUIDELINES REGARDING THE INSTALLATION AND MAINTENANCE OF APPROPRIATE RESILIENT SURFACE MATERIALS REQUIRED FOR YOUR PLAY AREA. NEVER ALLOW USE OF PLAYGROUND EQUIPMENT WITHOUT PROPER SAFETY SURFACING AS FALLS ONTO A HARD SURFACE CAN CAUSE SERIOUS INJURY TO THE USER.

TOOLS REQUIRED

Hammer

Drill

Tape Measure

Loctite

Utility Knife

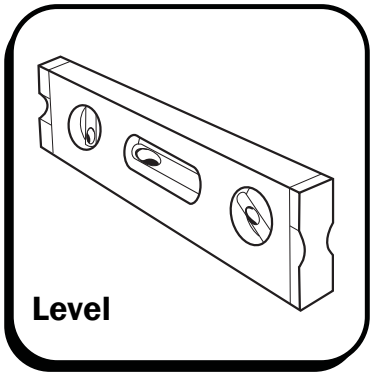
Level

1/4" Drill Bit

Rubber Mallet

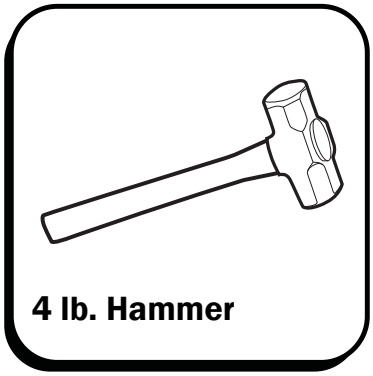
4 lb. Hammer

Phillips Head Screw Driver

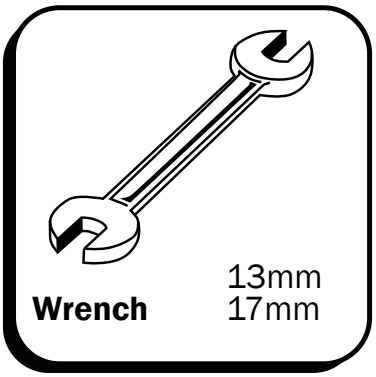
Wrench 13mm 17mm

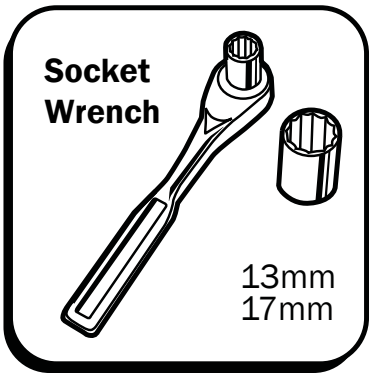
Socket Wrench 13mm 17mm

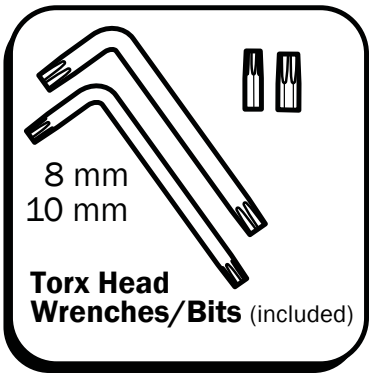
8 mm
10 mm
Torx Head Wrenches/Bits (included)

HARDWARE REFERENCE

M8 B.H.C.S. Bolts

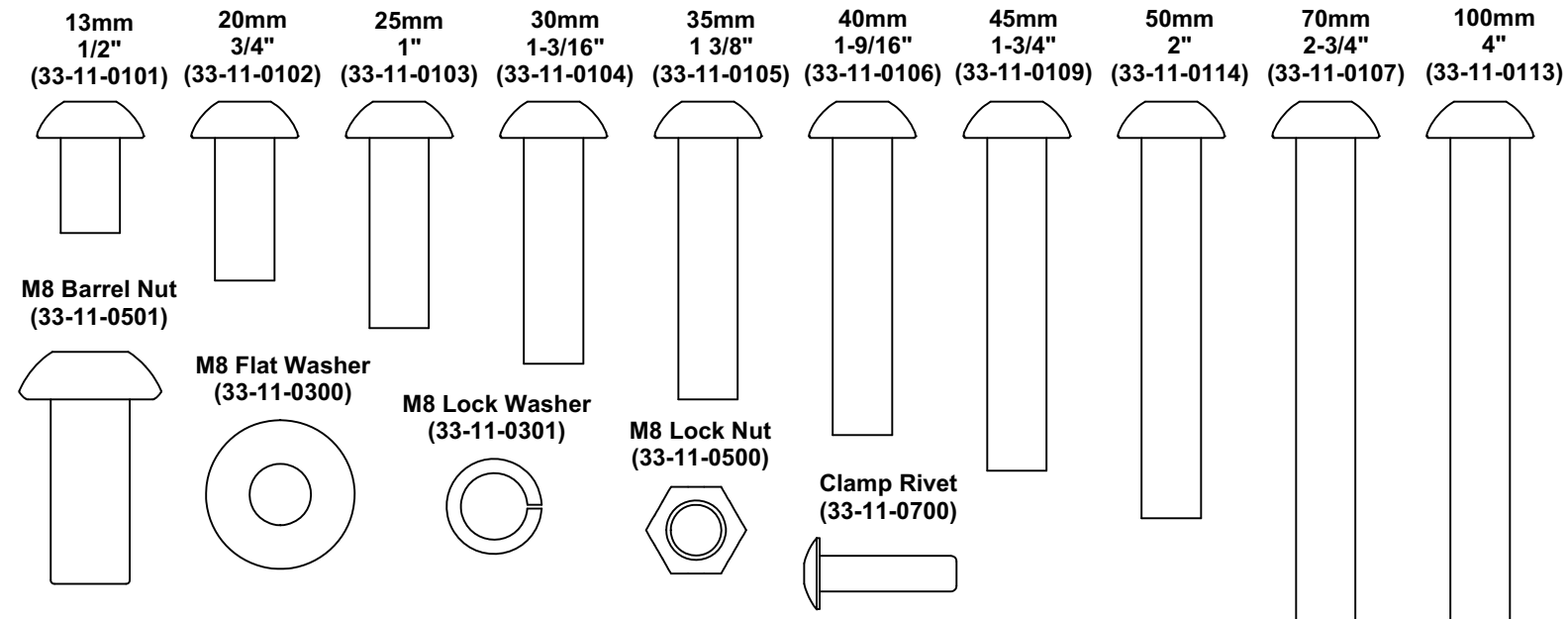

M10 B.H.C.S. Bolts

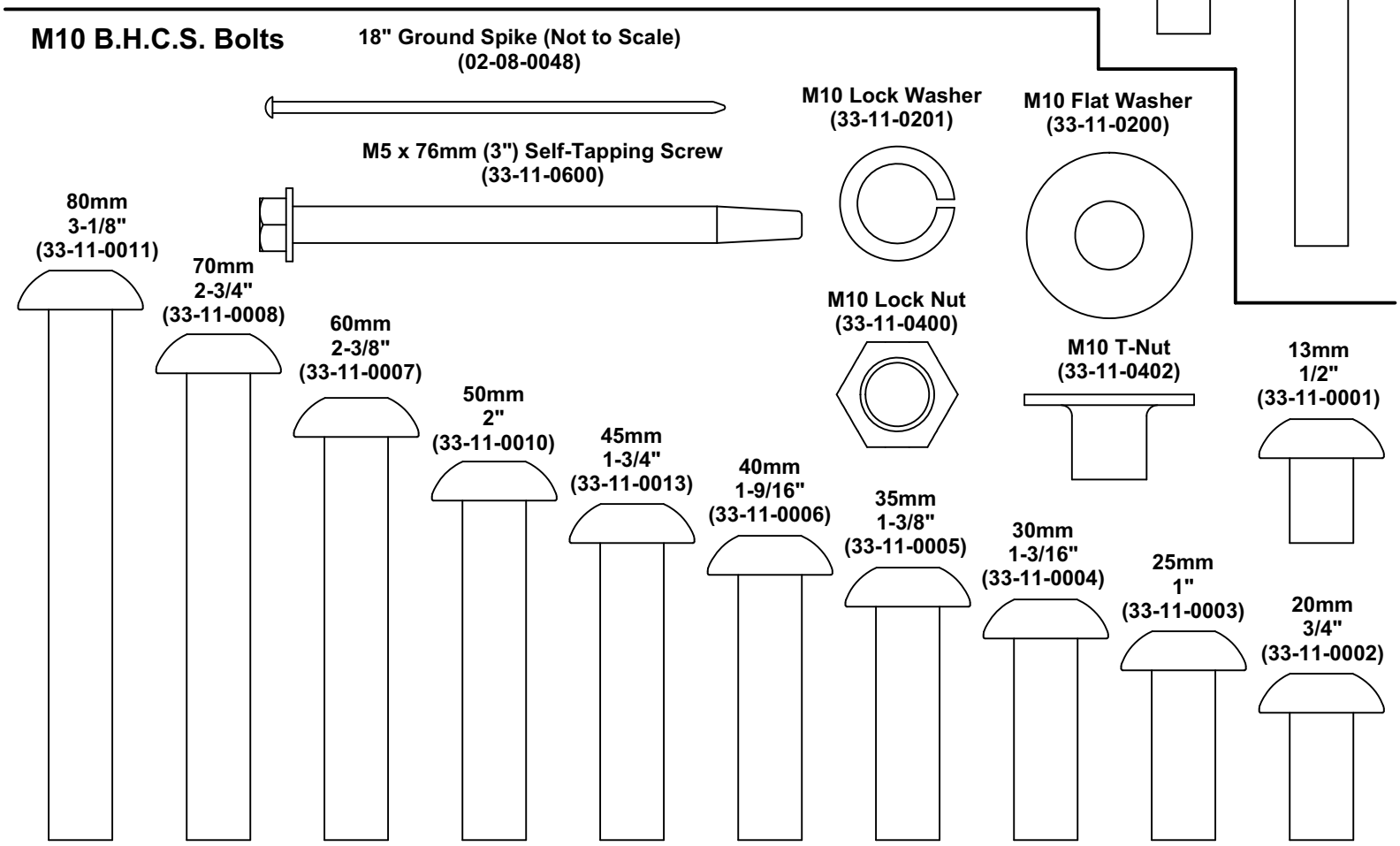

Issued/Revised: 07/18/14

UPRIGHT PLACEMENT

UPRIGHTS LIST		
DESCRIPTION	QTY	PART NUMBER
11' UPRIGHT	4	02-07-5028
13' UPRIGHT	4	02-07-5029

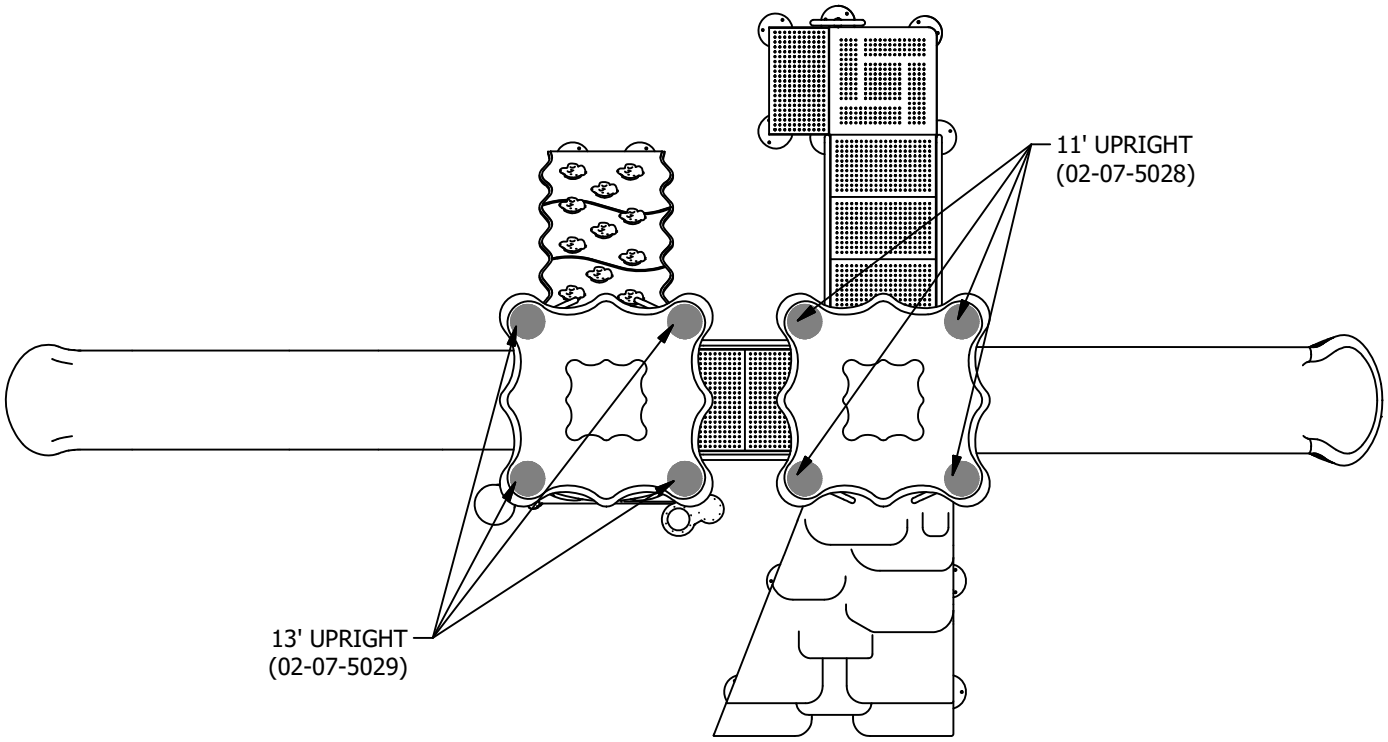

USE ZONE

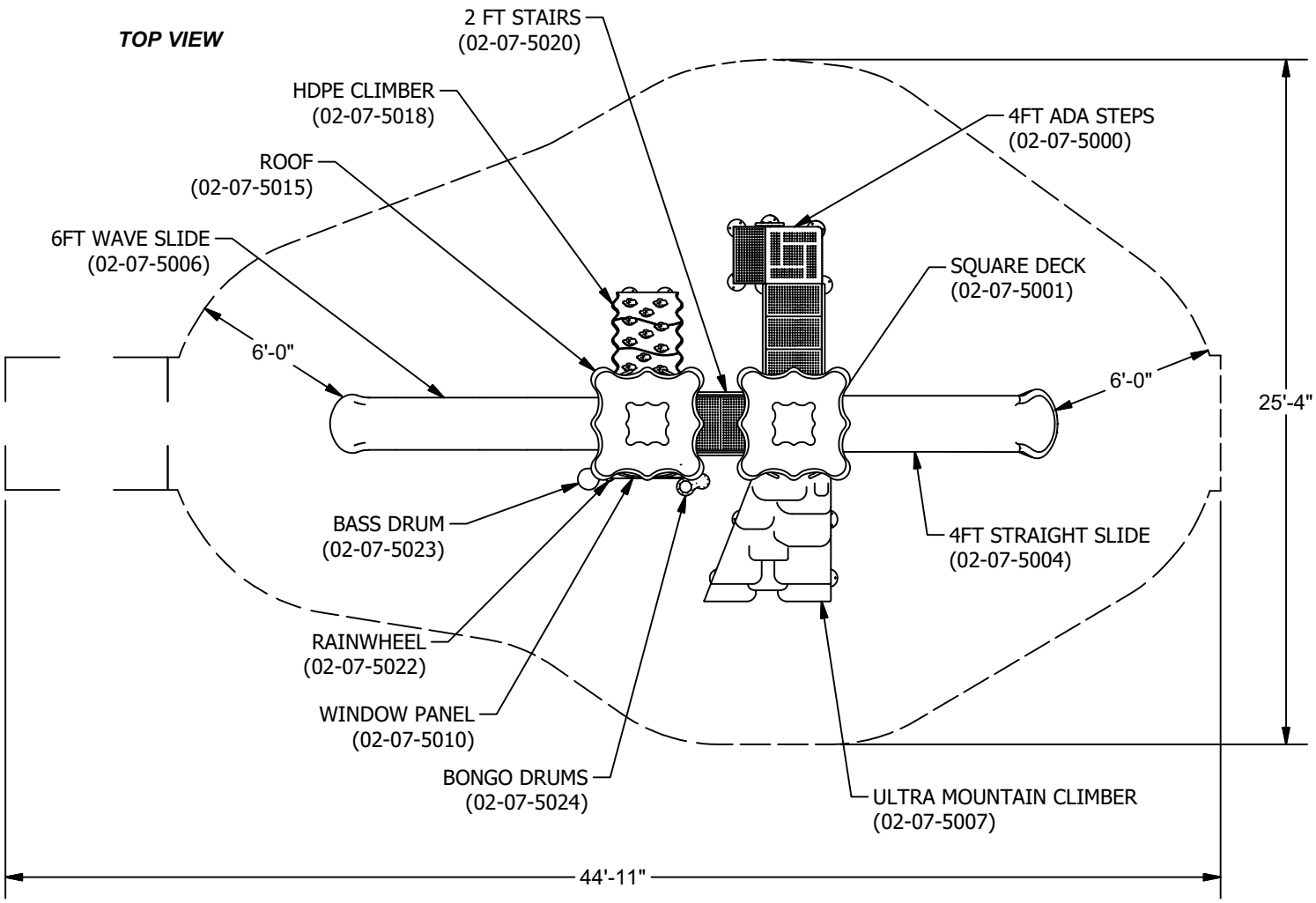

MINIMUM USE ZONE* REQUIRED

**The USE ZONE is the area beneath and immediately adjacent to a play structure or equipment that is designed for unrestricted circulation around the equipment and on whose surface it is predicted that a user would land when falling from or exiting the equipment.*

NOTE:
Equipment shall be positioned to eliminate conflicting traffic patterns. As a general rule, allow at least 3' of freespace around the entire structure.

IMPORTANT: Never install play equipment over hard, unresilient surfaces such as asphalt, concrete, or compacted earth. It is the owner's responsibility to ensure the "minimum area required" contains an appropriate amount of resilient materal to cushion accidental falls.

FOOTING DETAIL - SURFACE MOUNT (33-12-0054)

Parts List		
DESCRIPTION	QTY	PART NUMBER
CONCRETE ANCHOR	69	33-11-0702

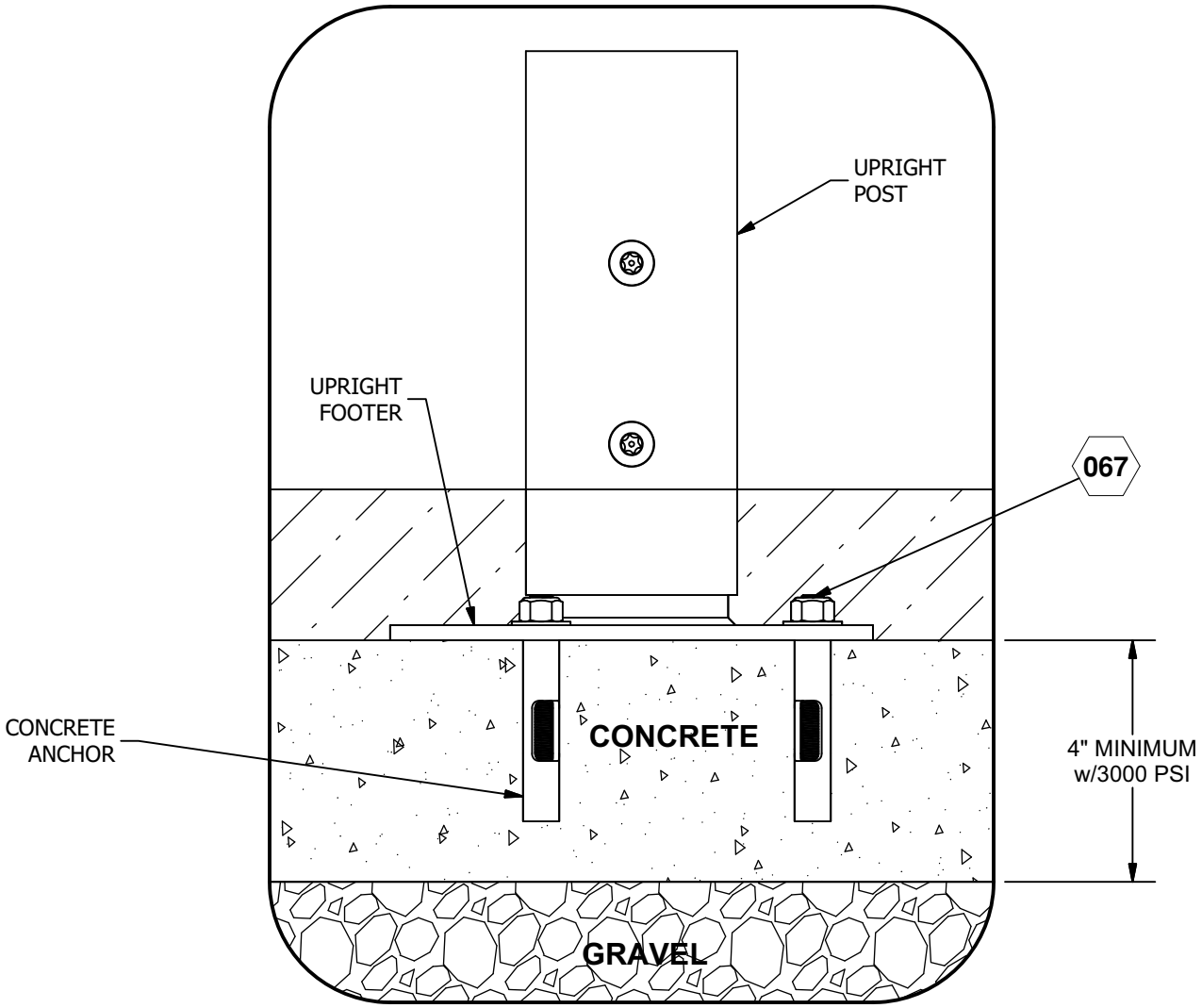

IMPORTANT: Never install play equipment over hard, unresilient surfaces such as asphalt, concrete, or compacted earth. It is the owner's responsibility to ensure the "minimum area required" contains an appropriate amount of resilient material to cushion accidental falls.

SITE PREPARATION

Clear area of any debris and level surface. Equipment is designed to be installed on a level surface.

FOOTING DETAIL - SURFACE MOUNT

1. Using Upright Footers as template, mark hole position on concrete. Drill 3/8" Dia. x 2" deep holes into concrete to receive anchor.
2. Attach Upright Footers to concrete using Concrete Anchor, Flat Washer, and Lock Nut. See Detail 067.

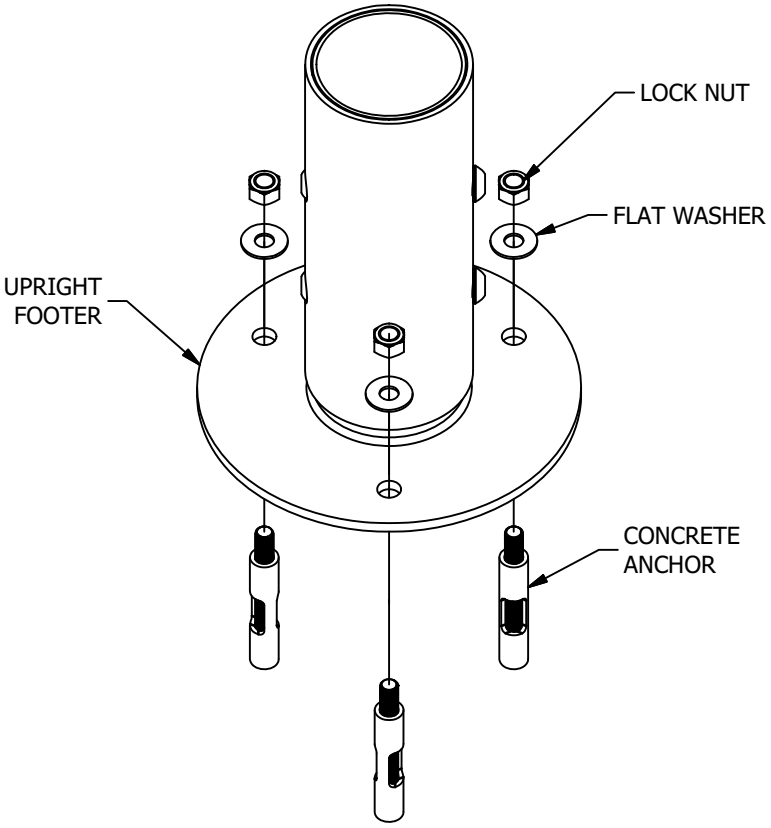

067

FOOTING DETAIL - ON GROUND (33-12-0117)

Parts List		
DESCRIPTION	QTY	PART NUMBER
GROUND SPIKE	69	02-07-0048

IMPORTANT:
UPRIGHTS WILL COME PRE-ASSEMBLED WITH UPRIGHT FOOTER POSITIONED IN THE BOTTOM (2) HOLES TO ACCOMODATE 2" OF SURFACING. WHEN INSTALLING 12" OF SURFACING, REMOVE BOLTS AND ADJUST UPRIGHT FOOTER POSITION TO UTILIZE THE TOP (2) HOLES.

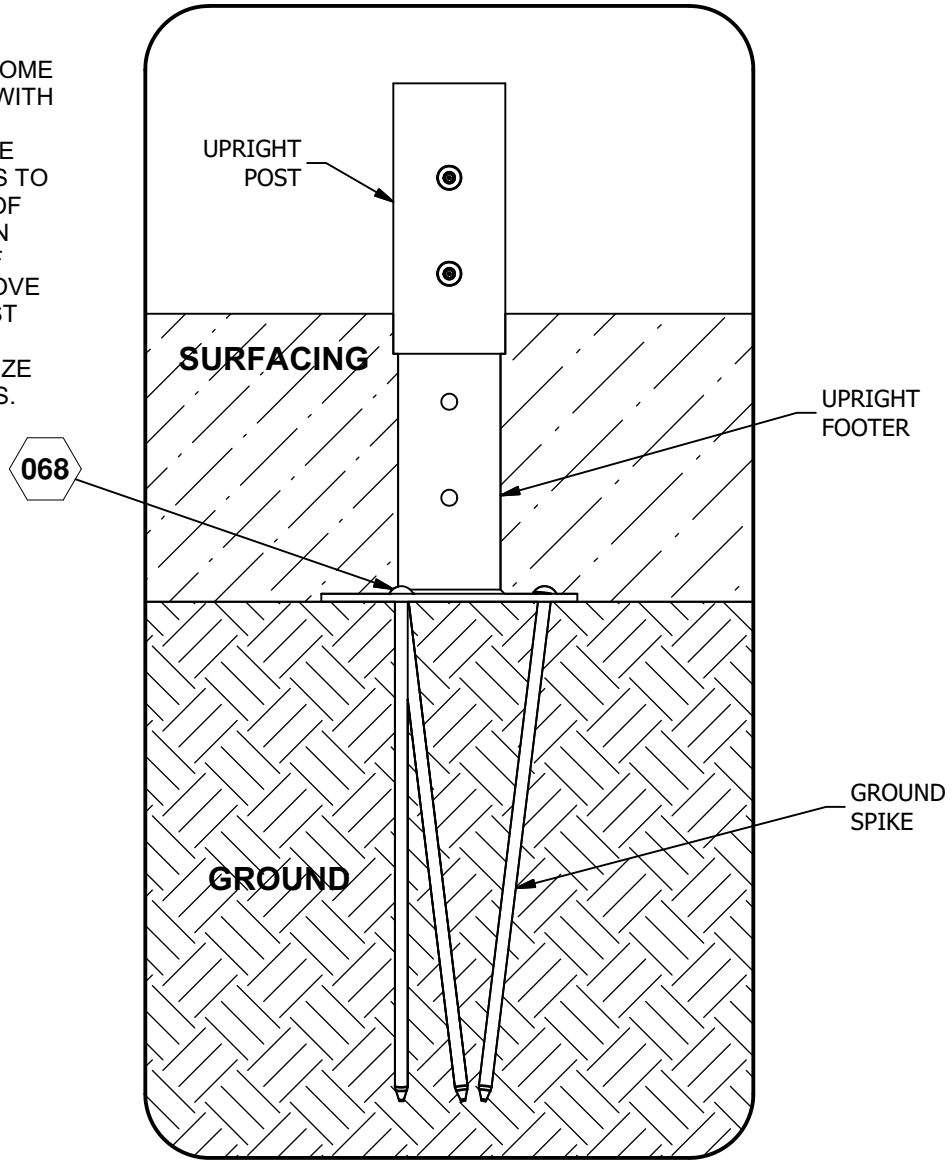

IMPORTANT: Never install play equipment over hard, unresilient surfaces such as asphalt, concrete, or compacted earth. It is the owner's responsibility to ensure the "minimum area required" contains an appropriate amount of resilient material to cushion accidental falls.

SITE PREPARATION

Clear area of any debris and level surface. Equipment is designed to be installed on a level surface.

FOOTING DETAIL - ON GROUND

1. With Upright Footers in position, secure each Upright Footer to the ground using Ground Spikes. NOTE: A 4lb. hammer may be required to drive spikes into the ground. Install ground spikes angled inward as shown in illustration. See Detail 068. **IMPORTANT:** Refer to Post Placement/Hole Locations diagram to mark locations of Upright Footers.

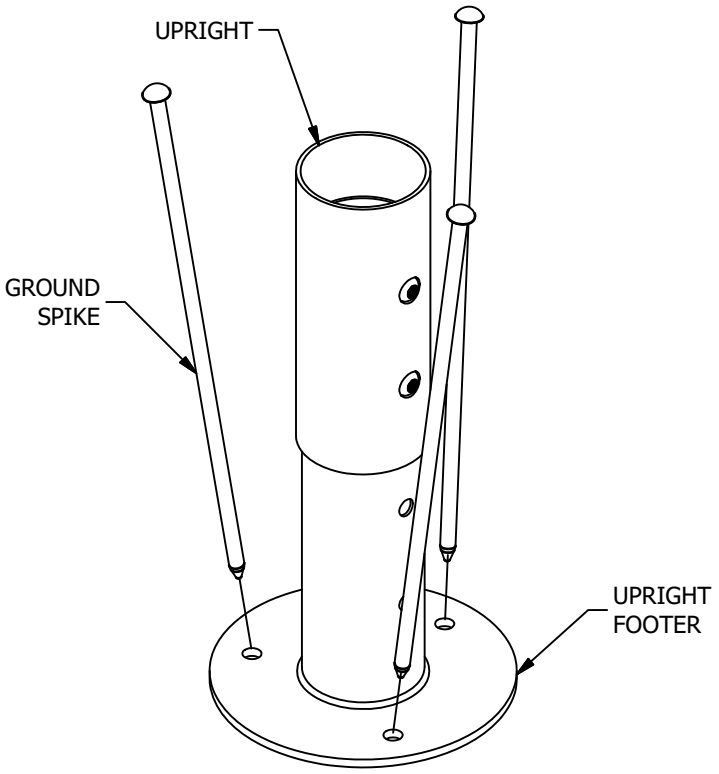

068

FOOTING DETAIL - IN GROUND (33-12-0096)

Parts List		
DESCRIPTION	QTY	PART NUMBER
INGROUND FOOTER	23	02-07-0049
3/8" x 1 1/4" P.B.H.C.S. w/PATCH	69	33-05-0019
3/8" FLAT WASHER	69	33-02-0002
3/8" HEX NUT	69	33-01-0002

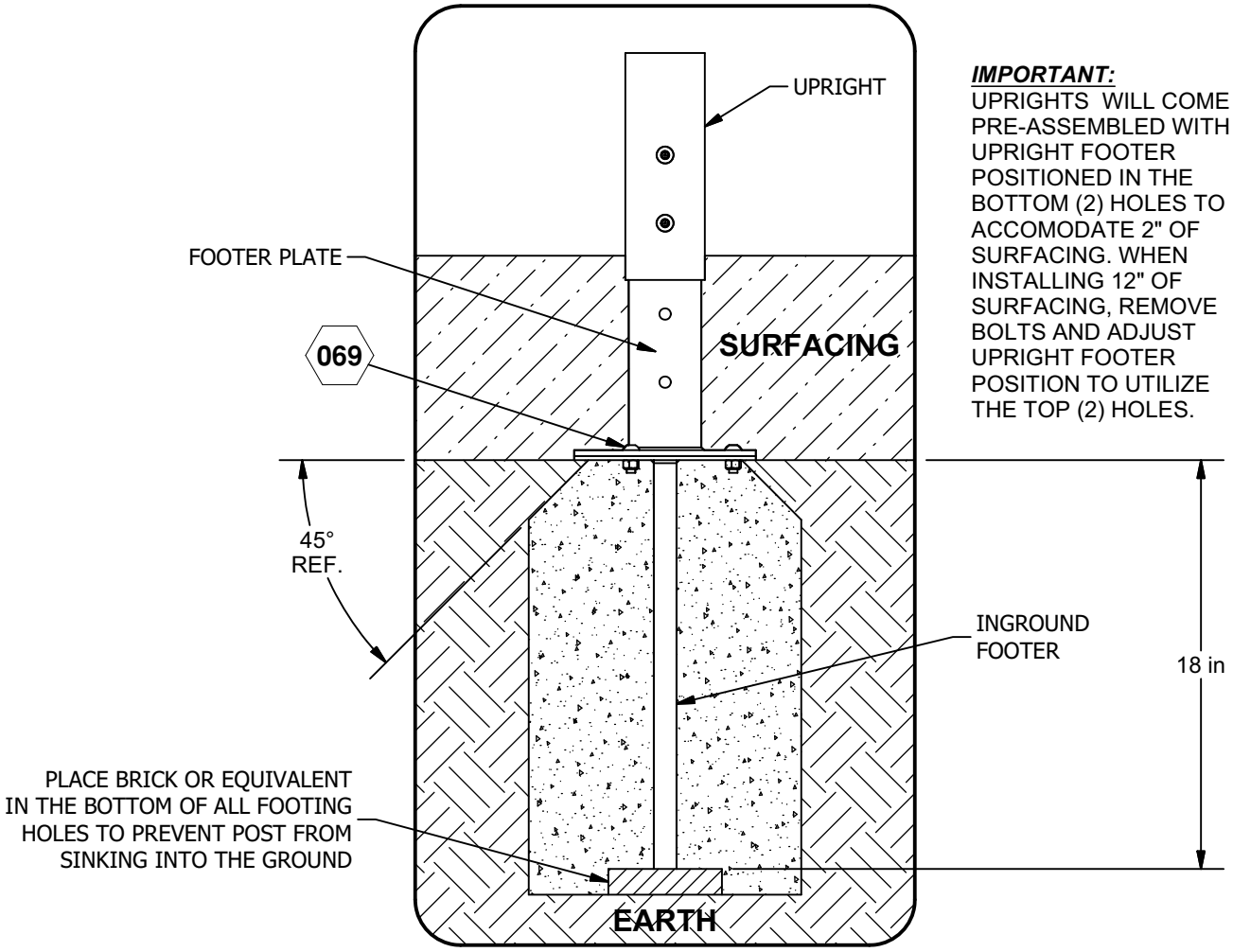

IMPORTANT:
UPRIGHTS WILL COME PRE-ASSEMBLED WITH UPRIGHT FOOTER POSITIONED IN THE BOTTOM (2) HOLES TO ACCOMODATE 2" OF SURFACING. WHEN INSTALLING 12" OF SURFACING, REMOVE BOLTS AND ADJUST UPRIGHT FOOTER POSITION TO UTILIZE THE TOP (2) HOLES.

IMPORTANT: Never install play equipment over hard, unresilient surfaces such as asphalt, concrete, or compacted earth. It is the owner's responsibility to ensure the "minimum area required" contains an appropriate amount of resilient material to cushion accidental falls.

SITE PREPARATION

Clear area of any debris and level surface. Equipment is designed to be installed on a level surface.

FOOTING DETAIL - IN GROUND

1. Attach Inground Footer to Upright Post using 3/8" x 1 1/4" P.B.H.C.S., 3/8" Flat Washer, and 3/8" Hex Nut. Refer to Footing Table and Footing Layout page for Hole/Footer location. See Detail 069.

2. Continue assembling unit before pouring concrete. Refer to specific component installation instructions. **IMPORTANT: POURING CONCRETE IS THE VERY LAST STEP!**

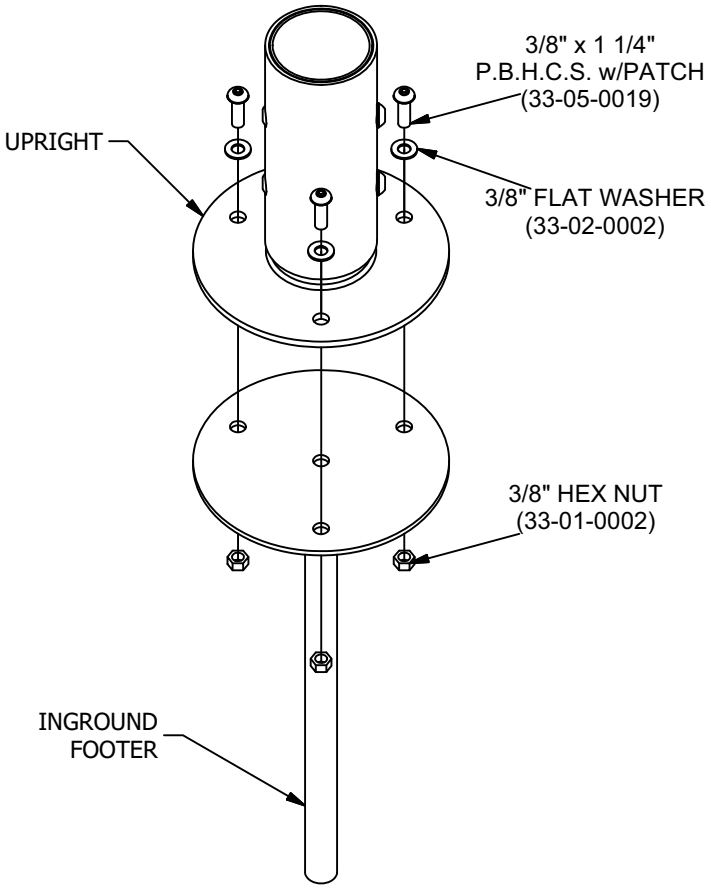

069

BIGHORN

Parts List		
DESCRIPTION	QTY	PART NUMBER
TUBE CLAMP	4	02-07-0039
PANEL CLAMP	4	02-07-0040
PANEL CLAMP 90° DOUBLE	1	02-07-0041
4FT ADA STEPS	1	02-07-5000
SQUARE DECK	2	02-07-5001
4FT. STRAIGHT SLIDE	1	02-07-5004
6FT. WAVE SLIDE	1	02-07-5006
ULTRA MOUNTAIN CLIMBER	1	02-07-5007
WINDOW PANEL	1	02-07-5010
ROOF	2	02-07-5015
HDPE CLIMBER	1	02-07-5018
2FT. STAIRS	1	02-07-5020
RAINWHEEL w/TUBE CLAMP	1	02-07-5022
BASS DRUM w/TUBE CLAMP	1	02-07-5023
BONGO DRUMS	1	02-07-5024
11' UPRIGHT	4	02-07-5028
13' UPRIGHT	4	02-07-5029

Unless Otherwise Specified, All Units of Measure are Each
Items listed below Hardware Complete line are included with Hardware Complete Number

Warning: During Installation, Hardware And Small Parts Are Choking Hazards For Young Children. Store Unused Parts Appropriately Until Assembly Is Completed. Once Assembly Is Completed, Remove Any Unused Parts From The Play Environment And Dispose/Save Them In A Secure Location. Any bolt end protruding more than two full threads beyond the face of the nut causes risk of clothing entanglement. Promptly cut-off flush, file smooth, and treat to prevent corrosion.

Note: Peen Tee-Nuts and Flatwashers to match radius of pipe after assembly is complete.
Note: Loctite (supplied by others) should be used on any non-patch hardware.

BIGHORN

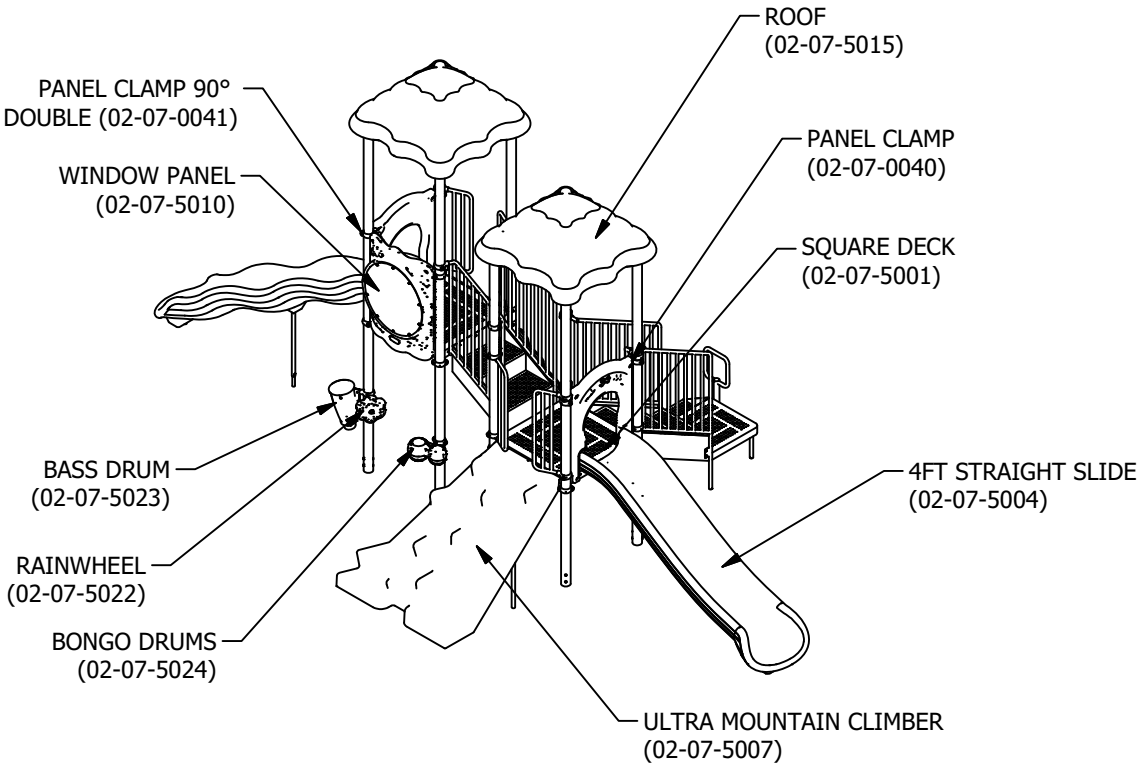

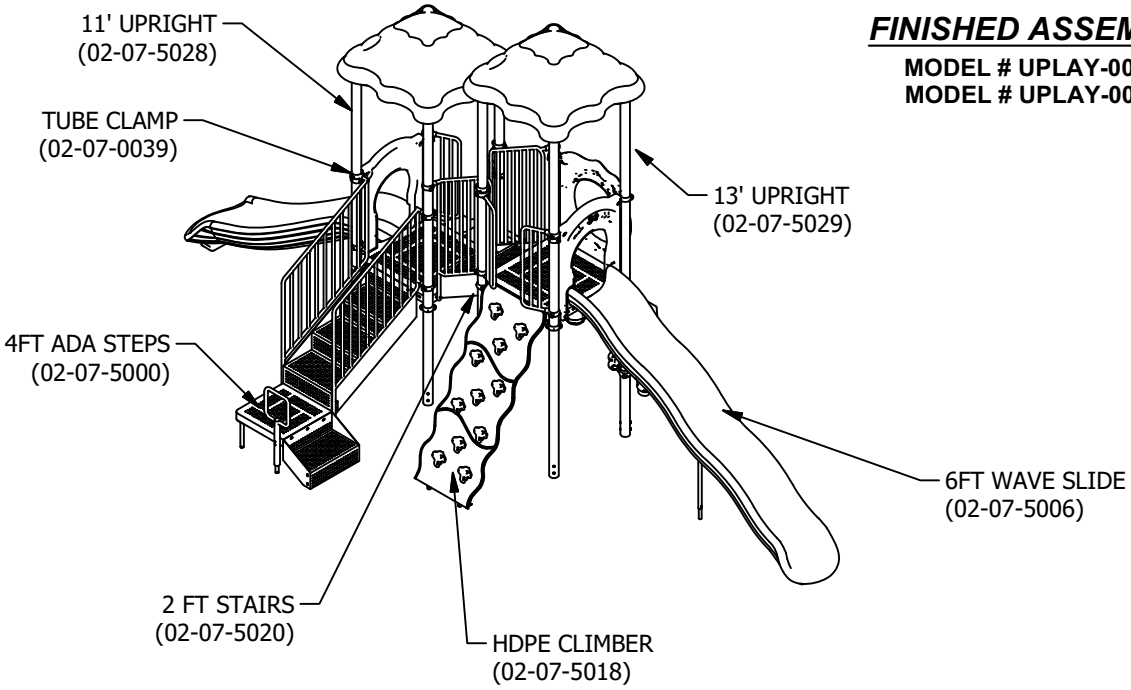

FINISHED ASSEMBLY

MODEL # UPLAY-008-N
MODEL # UPLAY-008-P

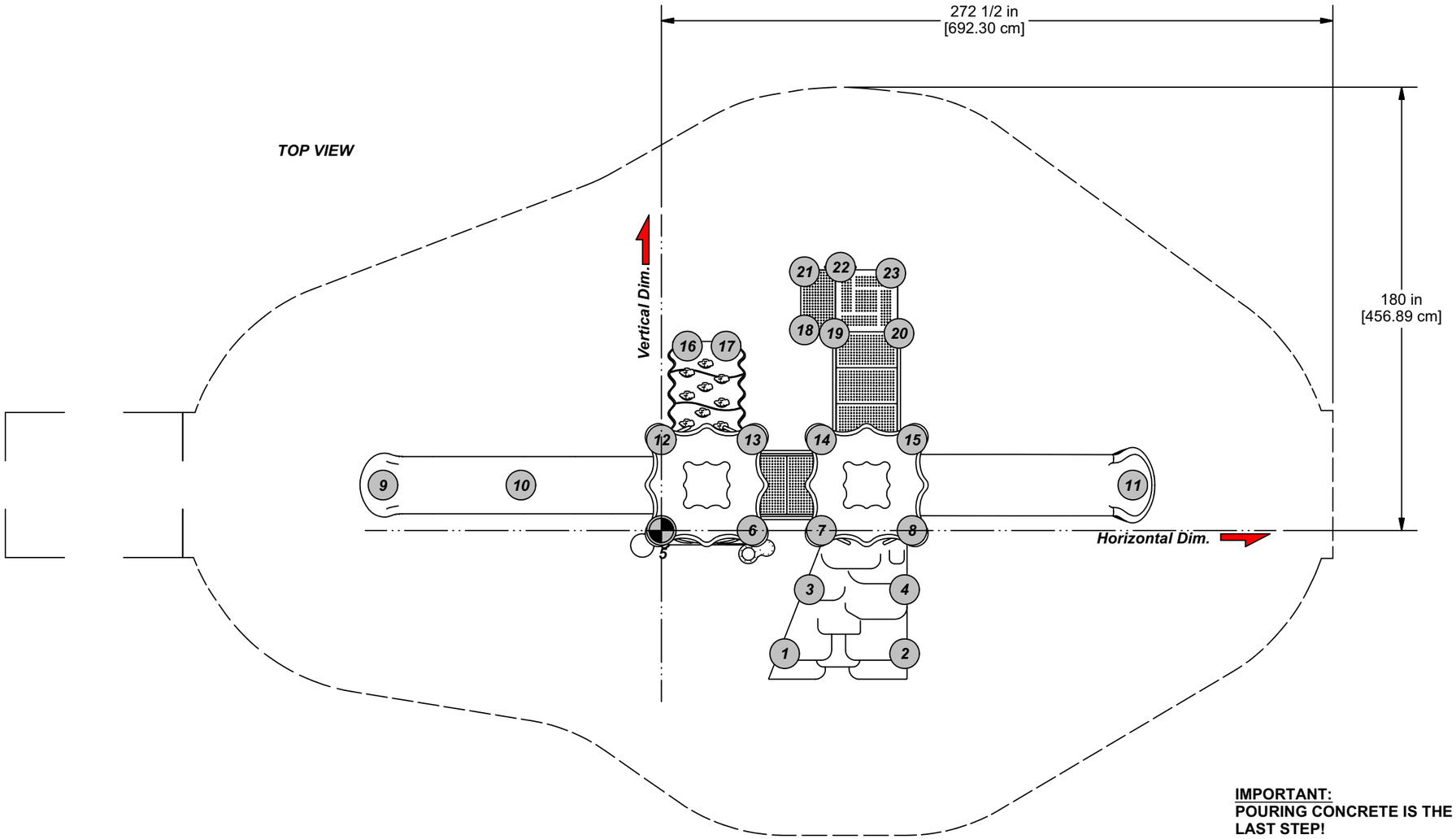

BIGHORN (UPLAY-008)

FOOTING TABLE			
Hole No.	Hor. Dim.	Ver. Dim.	Diagonal
1	50"	50"	70 3/4"
2	98 3/4"	50"	110 3/4"
3	60"	24"	64 3/4"
4	98 3/4"	24"	101 1/2"
5	0	0	0
6	36 3/4"	0	0
7	65"	0	0
8	101 3/4"	0	0
9	113"	18 1/2"	114 1/2"
10	57"	18 1/2"	60"
11	191 1/4"	18 1/2"	192 1/4"
12	0	36 3/4"	0
13	36 3/4"	36 3/4"	52"
14	65"	36 3/4"	74 3/4"
15	101 3/4"	36 3/4"	108 1/4"
16	10 1/2"	74 3/4"	75 1/2"
17	26 1/4"	74 3/4"	79 1/4"
18	58"	81 1/2"	100"
19	70 1/4"	80"	106 1/2"
20	96 1/2"	80"	125 1/4"
21	58"	105"	120"
22	72 3/4"	106 3/4"	129 1/4"
23	93"	104 1/2"	140"

IMPORTANT: Never install play equipment over hard, unresilient surfaces such as asphalt, concrete,or compacted earth. It is the owner's responsibility to ensure the "minimum area required" contains an appropriate amount of resilient material to cushion accidental falls.

Placement for
12" Diameter x 18" Deep Holes
for In-ground installation

IMPORTANT:
POURING CONCRETE IS THE VERY LAST STEP!

Concrete Required (if applicable):
Approx: 1.00 Cubic Yards (.77 Cubic Meters)
NOTE: Suggested Min. concrete rating: 3000PSI

1. Review Use Zone. Mark the placement of one Deck Post #5. Create a horizontal line and a vertical line with strings so you can use the footing table. All diagonal dims are from the center of hole #5 to the center of any other hole. **NOTE: Survey flags may be used to mark the placement of each hole.**
2. Measure from first Deck Post to mark the position of the remainig (3) posts. Check for squareness using the 52" diagonal dimension.
3. Measure from the center of a Deck Post using the dimensions provided for each remaining hole.

11' UPRIGHT, CLAMP, & FOOTER 02-07-5028

Parts List		
DESCRIPTION	QTY	PART NUMBER
3 1/2" UPRIGHT, 11' LG.	1	02-07-0001
UPRIGHT FOOTER	1	02-07-0042
HARDWARE COMPLETE	1	33-12-0026
M10 x 80mm (3 1/8") BHCS BOLT	2	33-11-0011*
M10 BARREL NUT	2	33-11-0401*

Unless Otherwise Specified, All Units of Measure are Each
Items listed below Hardware Complete line are included with Hardware Complete Number

Warning: During Installation, Hardware And Small Parts Are Choking Hazards For Young Children. Store Unused Parts Appropriately Until Assembly Is Completed. Once Assembly Is Completed, Remove Any Unused Parts From The Play Environment And Dispose/Save Them In A Secure Location. Any bolt end protruding more than two full threads beyond the face of the nut causes risk of clothing entanglement. Promptly cut-off flush, file smooth, and treat to prevent corrosion.

Note: Peen Tee-Nuts and Flatwashers to match radius of pipe after assembly is complete.
Note: Loctite (supplied by others) should be used on any non-patch hardware.

INSTALLATION INSTRUCTIONS:

IMPORTANT: DETERMINE WHICH MOUNTING OPTION YOU ARE USING; SURFACE MOUNT, ONGROUND, OR IN-GROUND.

1. Locate Uprights and Upright Footers to choose appropriate holes in Upright Footer depending on your surfacing application.

NOTE: USE TOP (2) HOLES FOR 12" ENGINEERED WOOD FIBER. USE BOTTOM (2) HOLES FOR 2" POURED-IN-PLACE OR RUBBER TILES.

2. Attach Upright Footer to Upright using M10 x 80mm B.H.C.S. and M10 Barrel Nut. See Detail 063.

NOTE: HEAD OF BOLT IS INSERTED THROUGH THE LARGE HOLE IN UPRIGHT.

3. Plumb and level entire assembly before tightening all fasteners. NOTE: Apply Loctite to threads of Bolt to prevent from loosening.

MAINTENANCE PROCEDURE:

Periodically check hardware for tightness, and tighten as necessary. Always check all parts for breakage or wear, and immediately put equipment out of service until any faulty parts found are repaired or replaced. Also Check all metal parts for rust, paint loss and touch-up if necessary with paint. Check for welded areas and verify integrity. Check periodically resilient surfacing for appropriate depth and remove extraneous materials that could cause injury, infection, or disease. Maintain detailed installation, inspection, maintenance, and repair records for each public-use playground equipment.

11' UPRIGHT, CLAMP, & FOOTER 02-07-5028

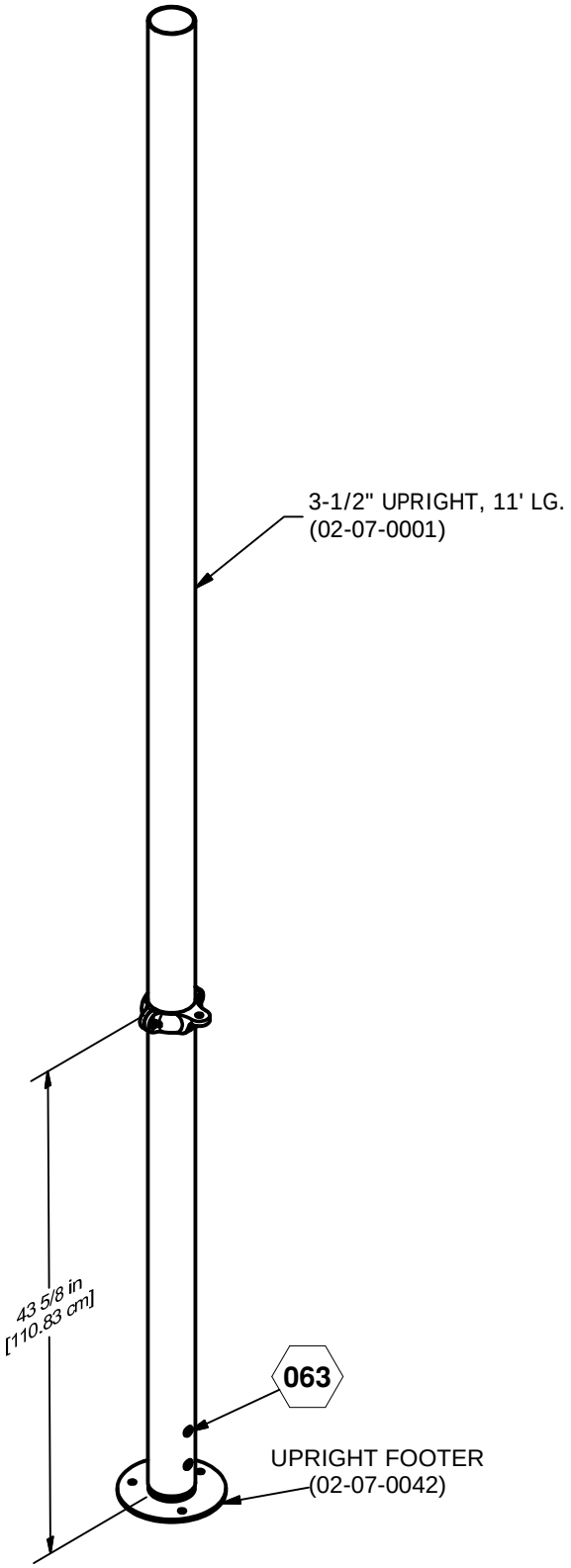

FINISHED ASSEMBLY

= INSTALLATION DETAIL

Issued/Revised: 05/24/13

11' UPRIGHT, CLAMP, & FOOTER 02-07-5028

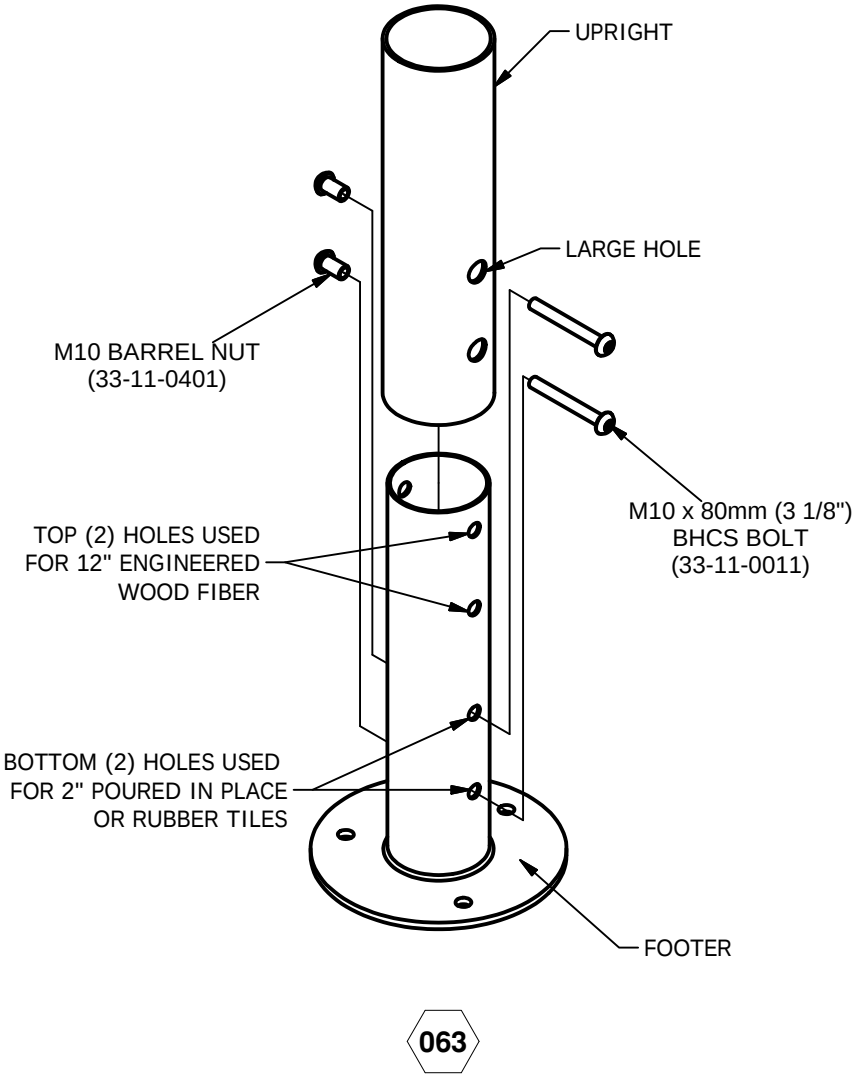

13' UPRIGHT, CLAMP, & FOOTER 02-07-5029

Parts List		
DESCRIPTION	QTY	PART NUMBER
3 1/2" UPRIGHT, 13' LG.	1	02-07-0002
UPRIGHT FOOTER	1	02-07-0042
HARDWARE COMPLETE	1	33-12-0026
M10 x 80mm (3 1/8") BHCS BOLT	2	33-11-0011*
M10 BARREL NUT	2	33-11-0401*

Unless Otherwise Specified, All Units of Measure are Each
Items listed below Hardware Complete line are included with Hardware Complete Number

Warning: During Installation, Hardware And Small Parts Are Choking Hazards For Young Children. Store Unused Parts Appropriately Until Assembly Is Completed. Once Assembly Is Completed, Remove Any Unused Parts From The Play Environment And Dispose/Save Them In A Secure Location. Any bolt end protruding more than two full threads beyond the face of the nut causes risk of clothing entanglement. Promptly cut-off flush, file smooth, and treat to prevent corrosion.

Note: Peen Tee-Nuts and Flatwashers to match radius of pipe after assembly is complete.
Note: Loctite (supplied by others) should be used on any non-patch hardware.

INSTALLATION INSTRUCTIONS:

IMPORTANT: DETERMINE WHICH MOUNTING OPTION YOU ARE USING; SURFACE MOUNT, ONGROUND, OR IN-GROUND.

1. Locate Uprights and Upright Footers to choose appropriate holes in Upright Footer depending on your surfacing application.

NOTE: USE TOP (2) HOLES FOR 12" ENGINEERED WOOD FIBER. USE BOTTOM (2) HOLES FOR 2" POURED-IN-PLACE OR RUBBER TILES.

2. Attach Upright Footer to Upright using M10 x 80mm B.H.C.S. and M10 Barrel Nut. See Detail 063.

NOTE: HEAD OF BOLT IS INSERTED THROUGH THE LARGE HOLE IN UPRIGHT.

3. Plumb and level entire assembly before tightening all fasteners. NOTE: Apply Loctite to threads of Bolt to prevent from loosening.

MAINTENANCE PROCEDURE:

Periodically check hardware for tightness, and tighten as necessary. Always check all parts for breakage or wear, and immediately put equipment out of service until any faulty parts found are repaired or replaced. Also Check all metal parts for rust, paint loss and touch-up if necessary with paint. Check for welded areas and verify integrity. Check periodically resilient surfacing for appropriate depth and remove extraneous materials that could cause injury, infection, or disease. Maintain detailed installation, inspection, maintenance, and repair records for each public-use playground equipment.

13' UPRIGHT, CLAMP, & FOOTER 02-07-5029

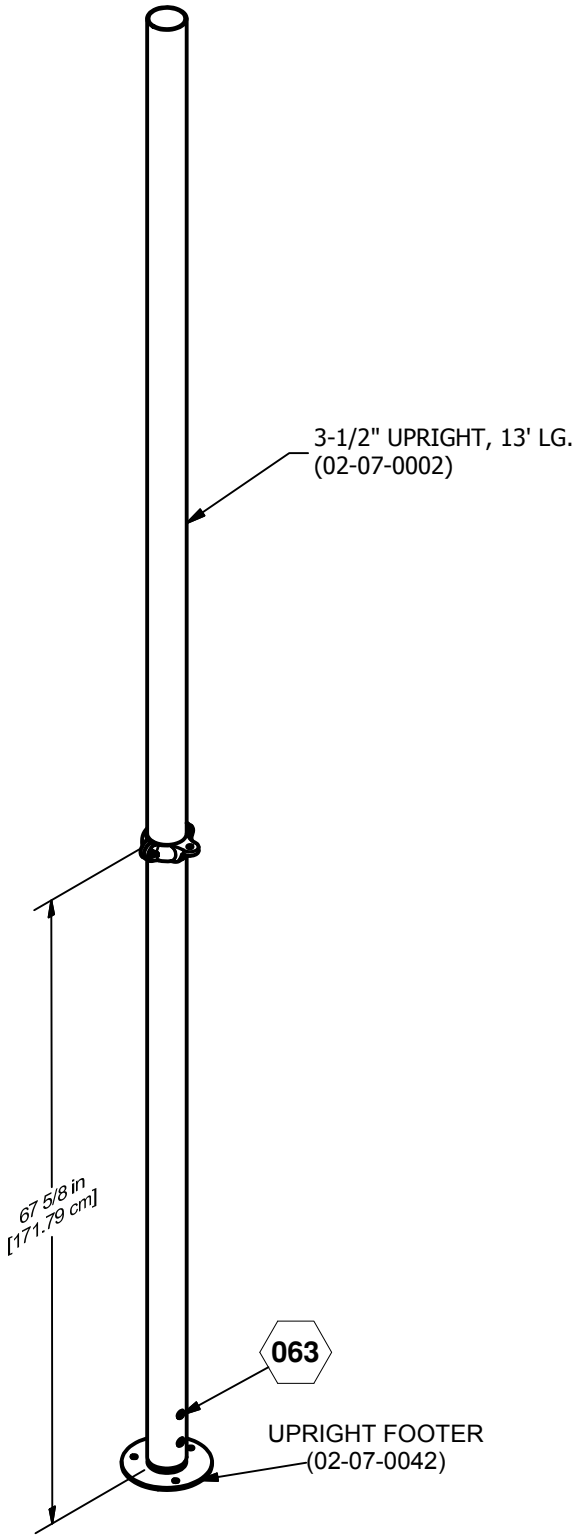

FINISHED ASSEMBLY

= INSTALLATION DETAIL

Issued/Revised: 05/24/13

13' UPRIGHT, CLAMP, & FOOTER 02-07-5029

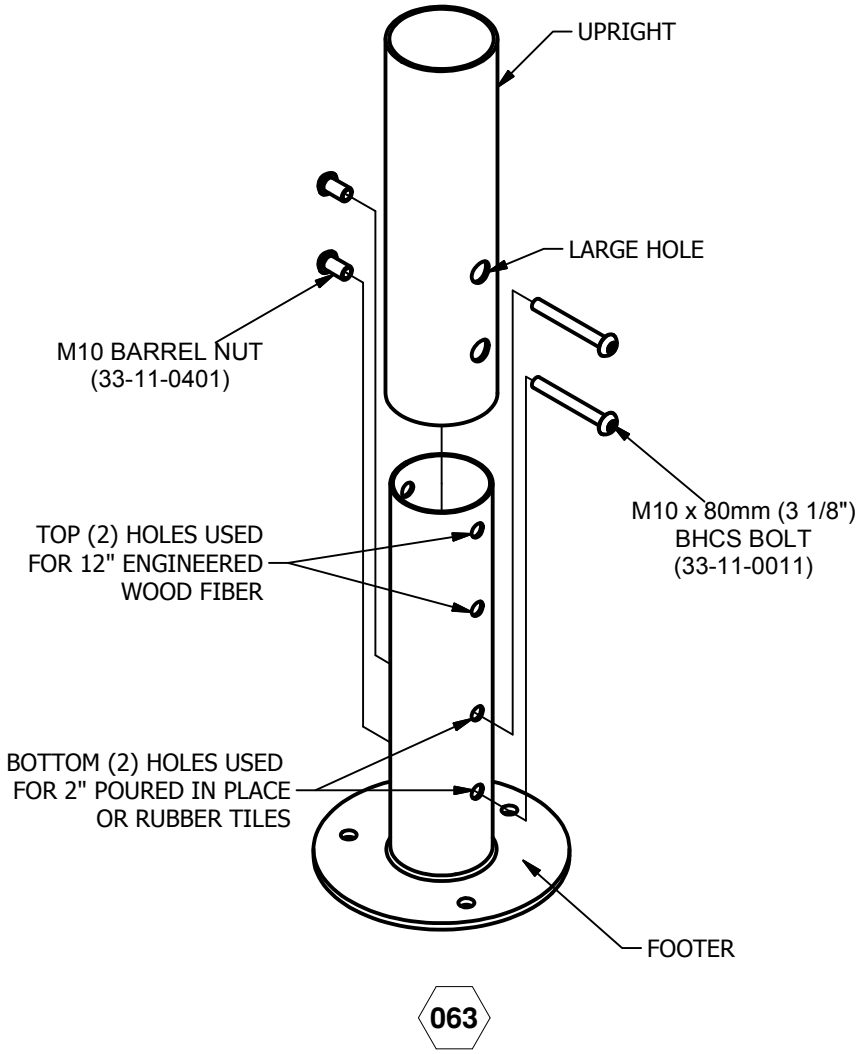

SQUARE DECK 02-07-5001

Parts List		
DESCRIPTION	QTY	PART NUMBER
SQUARE DECK	1	02-07-0003
HARDWARE COMPLETE	1	33-12-0019
M10 x 30mm (1 3/16") BHCS BOLT	4	33-11-0004*
M10 FLATWASHER	4	33-11-0200*
M10 LOCK NUT	4	33-11-0400*

Unless Otherwise Specified, All Units of Measure are Each
Items listed below Hardware Complete line are included with Hardware Complete Number

Warning: During Installation, Hardware And Small Parts Are Choking Hazards For Young Children. Store Unused Parts Appropriately Until Assembly Is Completed. Once Assembly Is Completed, Remove Any Unused Parts From The Play Environment And Dispose/Save Them In A Secure Location. Any bolt end protruding more than two full threads beyond the face of the nut causes risk of clothing entanglement. Promptly cut-off flush, file smooth, and treat to prevent corrosion.

Note: Peen Tee-Nuts and Flatwashers to match radius of pipe after assembly is complete.
Note: Loctite (supplied by others) should be used on any non-patch hardware.

INSTALLATION INSTRUCTIONS:

IMPORTANT: ***DETERMINE WHICH MOUNTING OPTION YOU ARE USING; SURFACE MOUNT, ONGROUND, OR IN-GROUND.***

1. Trim out slots with utillity knife if necessary.

2. Place Uprights into position with clamp flange pointing inwards.

NOTE: ***POST MUST BE SUPPORTED UNTIL ALL HARDWARE IS INSTALLED.***

3. Attach Deck to Uprights using M10 x 30mm B.H.C.S. Bolt, M10 Flat Washer, and M10 Lock Nut. See Detail 044.

4. Level Deck and make the appropriate adjustments.

5. Plumb and level entire assembly before tightening all fasteners. NOTE: Apply Loctite to threads of Bolt to prevent from loosening.

MAINTENANCE PROCEDURE:

Periodically check hardware for tightness, and tighten as necessary. Always check all parts for breakage or wear, and immediately put equipment out of service until any faulty parts found are repaired or replaced. Also Check all metal parts for rust, paint loss and touch-up if necessary with paint. Check for welded areas and verify integrity. Check periodically resilient surfacing for appropriate depth and remove extraneous materials that could cause injury, infection, or disease. Maintain detailed installation, inspection, maintenance, and repair records for each public-use playground equipment.

SQUARE DECK 02-07-5001

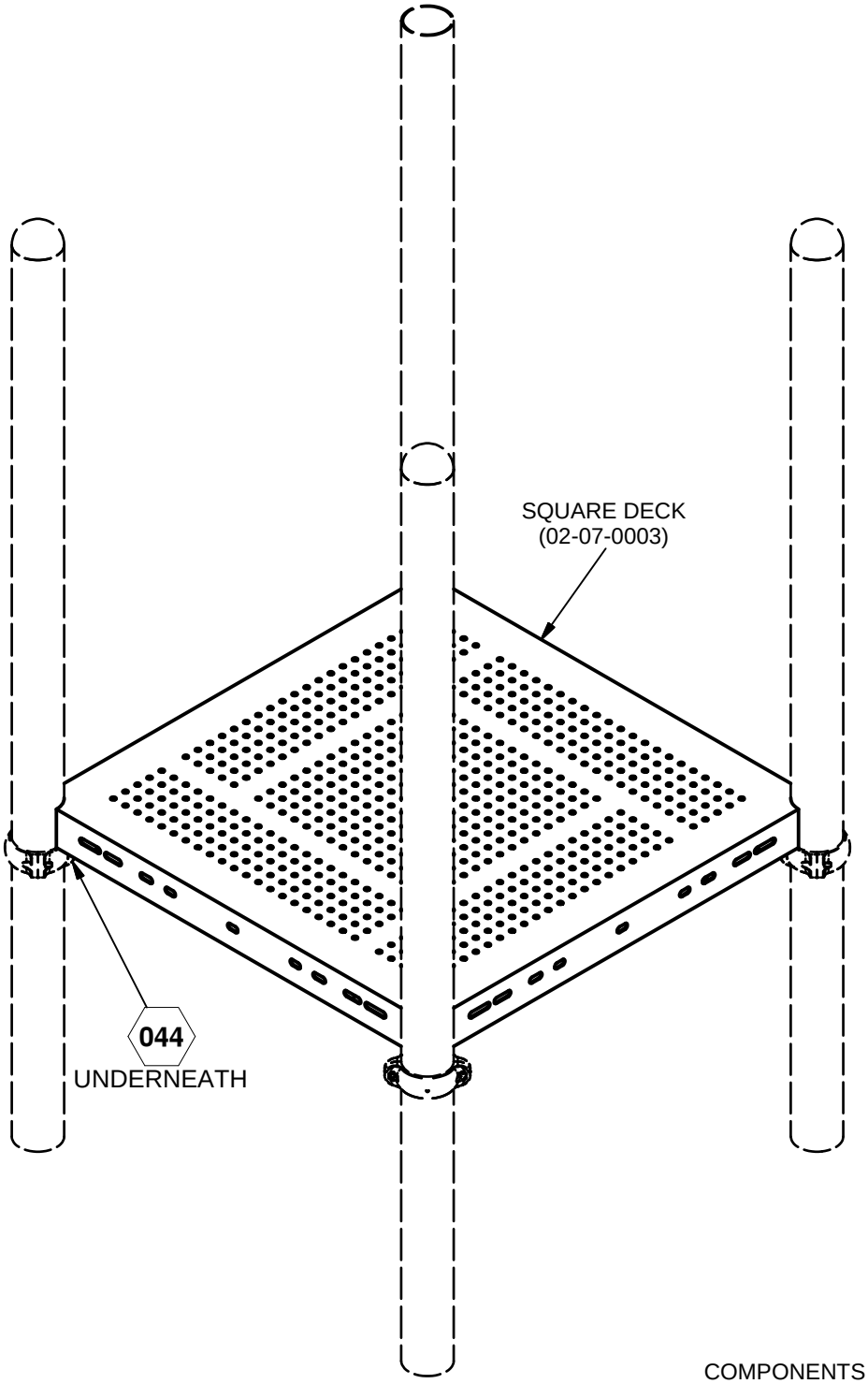

= INSTALLATION DETAIL

COMPONENTS SHOWN IN
HIDDEN LINES ARE SOLD SEPARATELY

FINISHED ASSEMBLY

SQUARE DECK 02-07-5001

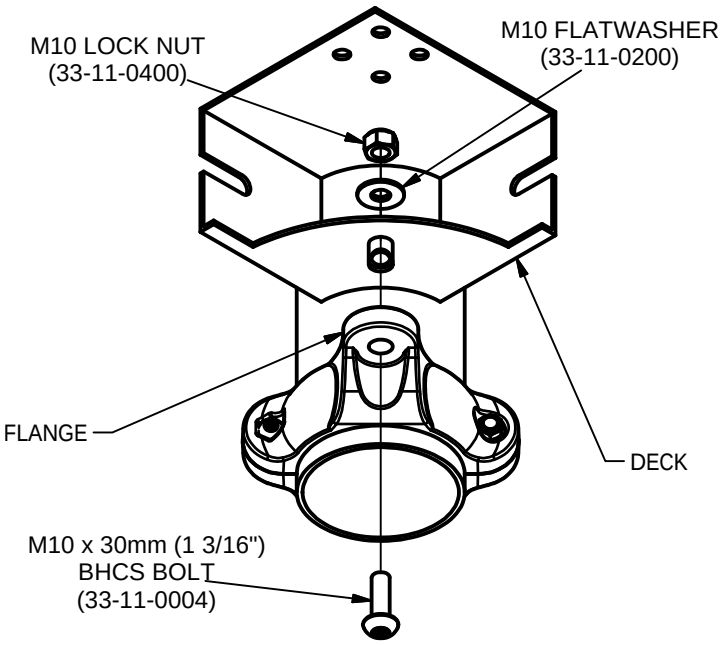

044

TUBE CLAMP 02-07-0039

Parts List		
DESCRIPTION	QTY	PART NUMBER
TUBE CLAMP	1	02-07-0039

Unless Otherwise Specified, All Units of Measure are Each
Items listed below Hardware Complete line are included with Hardware Complete Number

Warning: During Installation, Hardware And Small Parts Are Choking Hazards For Young Children. Store Unused Parts Appropriately Until Assembly Is Completed. Once Assembly Is Completed, Remove Any Unused Parts From The Play Environment And Dispose/Save Them In A Secure Location. Any bolt end protruding more than two full threads beyond the face of the nut causes risk of clothing entanglement. Promptly cut-off flush, file smooth, and treat to prevent corrosion.

Note: Peen Tee-Nuts and Flatwashers to match radius of pipe after assembly is complete.
Note: Loctite (supplied by others) should be used on any non-patch hardware.

INSTALLATION INSTRUCTIONS:

NOTE: CLAMPS MUST BE ATTACHED TO COMPONENTS PRIOR TO ATTACHING TO UPRIGHT.

1. Attach Tube Clamp to Upright using M8 x 25mm B.H.C.S. and M8 Lock Nut. See Detail 030.

IMPORTANT: HARDWARE INCLUDED IN COMPONENTS.

2. Once assembly is complete, plumb and level structure and tighten all fasteners securely. Drill Ø1/4" hole through the clamp and upright. Insert Clamp Rivet into drilled hole and tap into place with hammer. See Detail 030.

MAINTENANCE PROCEDURE:

Periodically check hardware for tightness, and tighten as necessary. Always check all parts for breakage or wear, and immediately put equipment out of service until any faulty parts found are repaired or replaced. Also Check all metal parts for rust, paint loss and touch-up if necessary with paint. Check for welded areas and verify integrity. Check periodically resilient surfacing for appropriate depth and remove extraneous materials that could cause injury, infection, or disease. Maintain detailed installation, inspection, maintenance, and repair records for each public-use playground equipment.

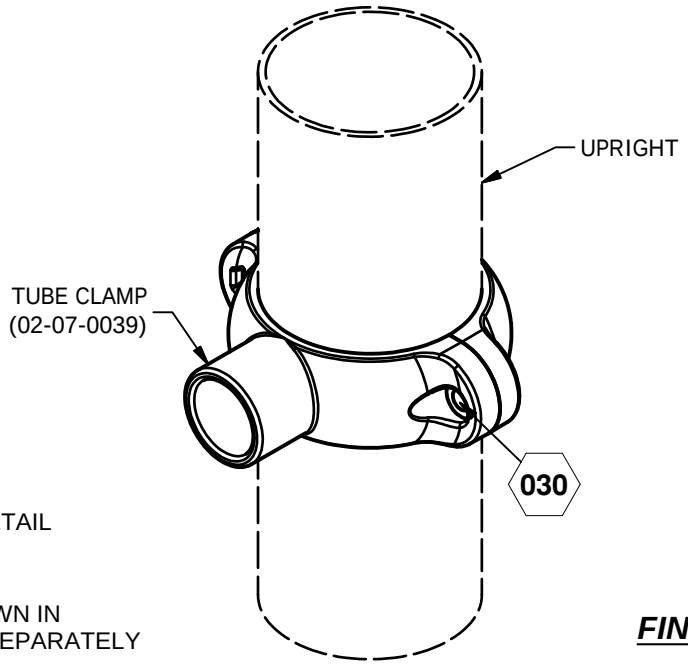

= INSTALLATION DETAIL

COMPONENTS SHOWN IN
HIDDEN LINES ARE SOLD SEPARATELY

FINISHED ASSEMBLY

TUBE CLAMP 02-07-0039

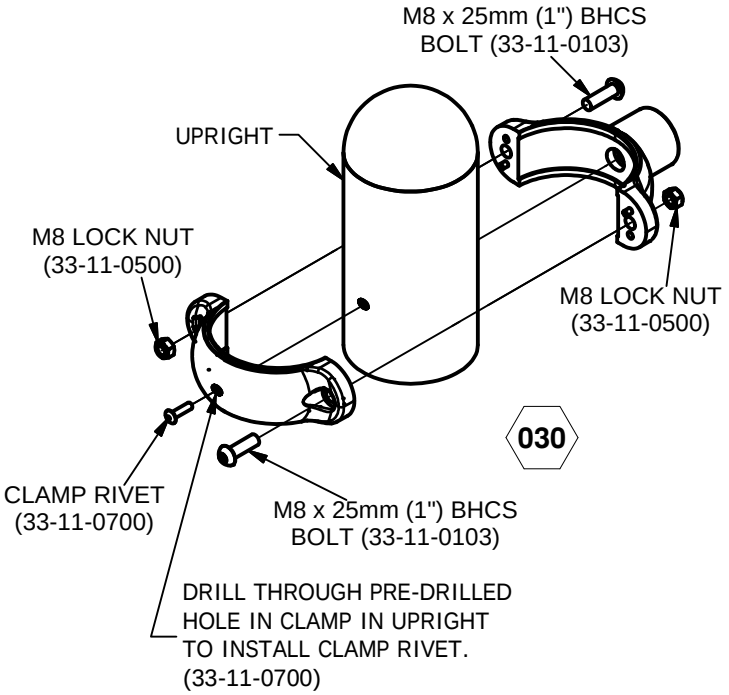

2FT. STAIRS 02-07-5020

Parts List		
DESCRIPTION	QTY	PART NUMBER
TOWER STAIR	1	02-07-0007
LEFT HANDRAIL	1	02-07-0009
RIGHT HANDRAIL	1	02-07-0096
TUBE CLAMP	4	02-07-0039
HARDWARE COMPLETE	1	33-12-0074
M10 x 25mm (1") BHCS BOLT	6	33-11-0003*
M10 x 20mm (3/4") BHCS BOLT	2	33-11-0002*
M10 FLATWASHER	16	33-11-0200*
M10 LOCK NUT	8	33-11-0400*
M10 x 50mm (2") BHCS BOLT	2	33-11-0010*
M8 LOCK NUT	8	33-11-0500*
M8 LOCKWASHER	4	33-11-0301*
M8 x 25mm (1") BHCS BOLT	12	33-11-0103*
CLAMP RIVET	4	33-11-0700*

Unless Otherwise Specified, All Units of Measure are Each
Items listed below Hardware Complete line are included with Hardware Complete Number

Warning: During Installation, Hardware And Small Parts Are Choking Hazards For Young Children. Store Unused Parts Appropriately Until Assembly Is Completed. Once Assembly Is Completed, Remove Any Unused Parts From The Play Environment And Dispose/Save Them In A Secure Location. Any bolt end protruding more than two full threads beyond the face of the nut causes risk of clothing entanglement. Promptly cut-off flush, file smooth, and treat to prevent corrosion.

Note: Peen Tee-Nuts and Flatwashers to match radius of pipe after assembly is complete.
Note: Loctite (supplied by others) should be used on any non-patch hardware.

INSTALLATION INSTRUCTIONS:

IMPORTANT: DETERMINE WHICH MOUNTING OPTION YOU ARE USING; SURFACE MOUNT, ONGROUND, OR IN-GROUND.

1. Trim out slots with utility knife if necessary.
2. Attach Tower Stair to Deck using M10 x 25mm B.H.C.S. Bolt, M10 Flat Washer, and M10 Lock Nut. See Detail 031.
3. Insert Handrail into Tube Clamp and secure using M8 x 25mm B.H.C.S. Bolt and M8 Lock Washer. See Detail 029.
4. Attach Tube Clamp to Upright using M8 x 25mm B.H.C.S. Bolt and M8 Lock Nut. See Detail 030. (Do not install Clamp Rivet until entire unit is assemblied.)
5. Attach Handrail to upper Deck using M10 x 20mm B.H.C.S. Bolt and M10 Flat Washer. See Detail 055.
6. Attach other end of Handrail to lower Deck using M10 x 50mm B.H.C.S. Bolt, M10 Flat Washer, and M10 Lock Nut. See Detail 056.
7. Plumb and level entire assembly before tightening all fasteners. Note: Apply Loctite to threads of Bolt to prevent from loosening.

MAINTENANCE PROCEDURE:

Periodically check hardware for tightness, and tighten as necessary. Always check all parts for breakage or wear, and immediately put equipment out of service until any faulty parts found are repaired or replaced. Also Check all metal parts for rust, paint loss and touch-up if necessary with paint. Check for welded areas and verify integrity. Check periodically resilient surfacing for appropriate depth and remove extraneous materials that could cause injury, infection, or disease. Maintain detailed installation, inspection, maintenance, and repair records for each public-use playground equipment.

2FT. STAIRS 02-07-5020

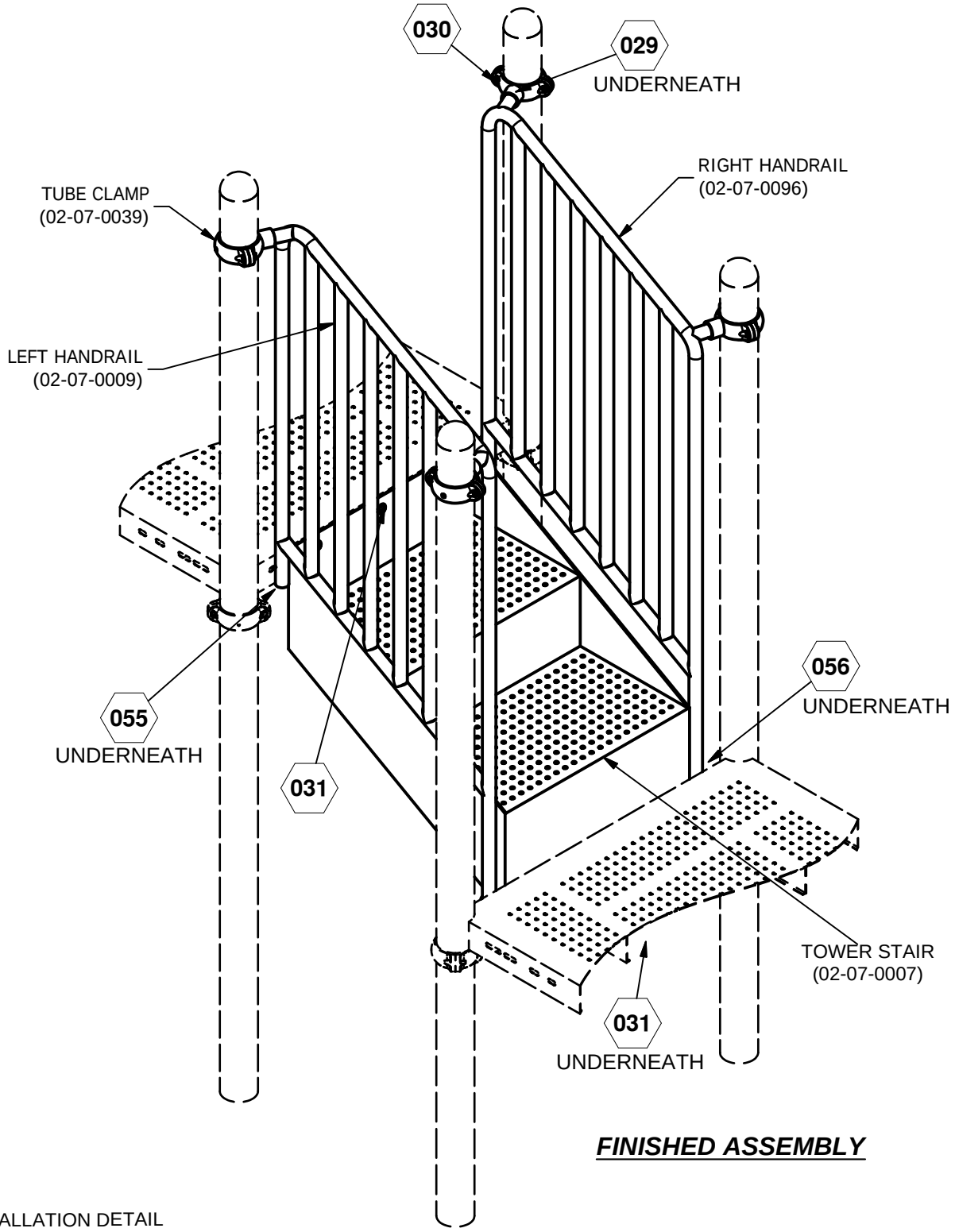

FINISHED ASSEMBLY

= INSTALLATION DETAIL

COMPONENTS SHOWN IN
HIDDEN LINES ARE SOLD SEPARATELY

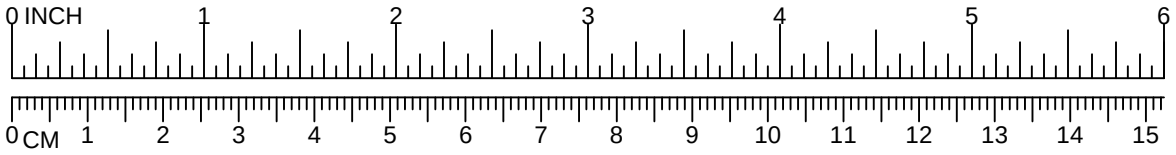

2FT. STAIRS 02-07-5020

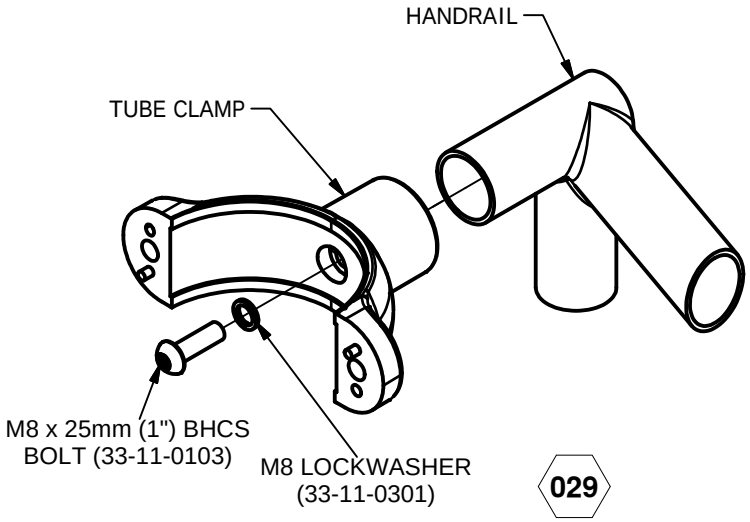

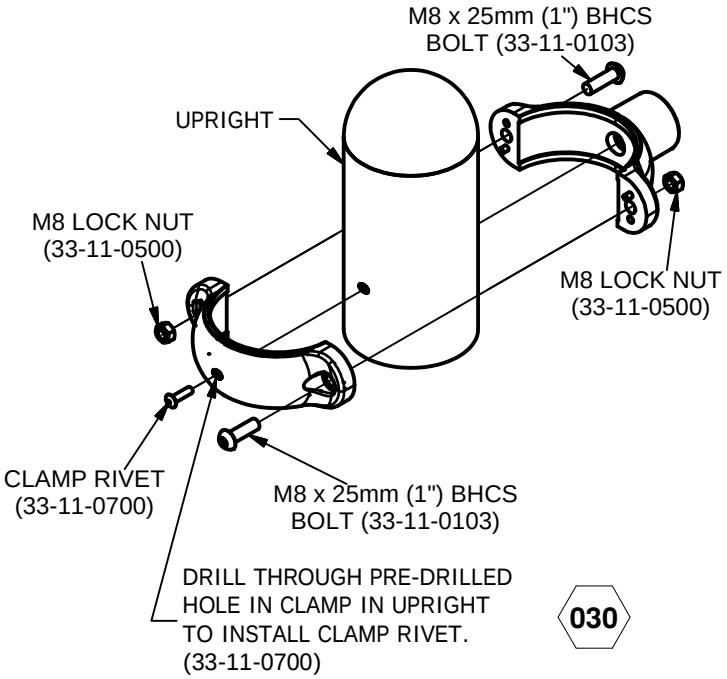

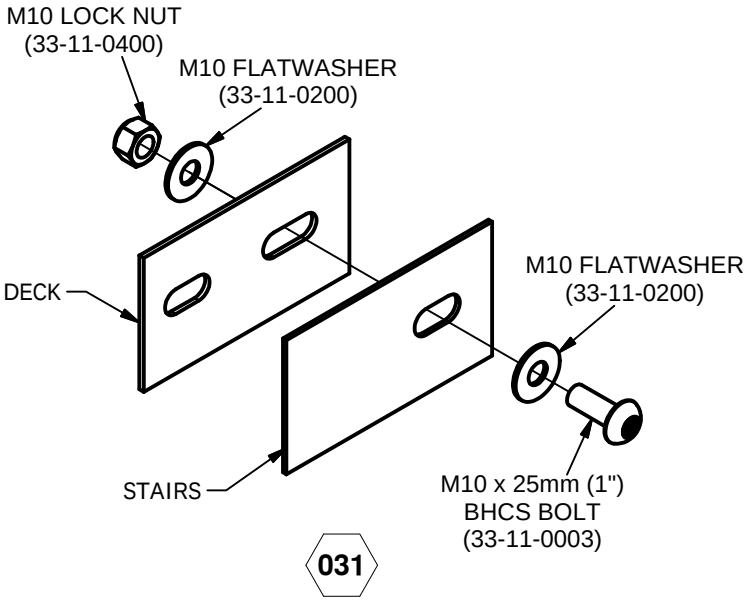

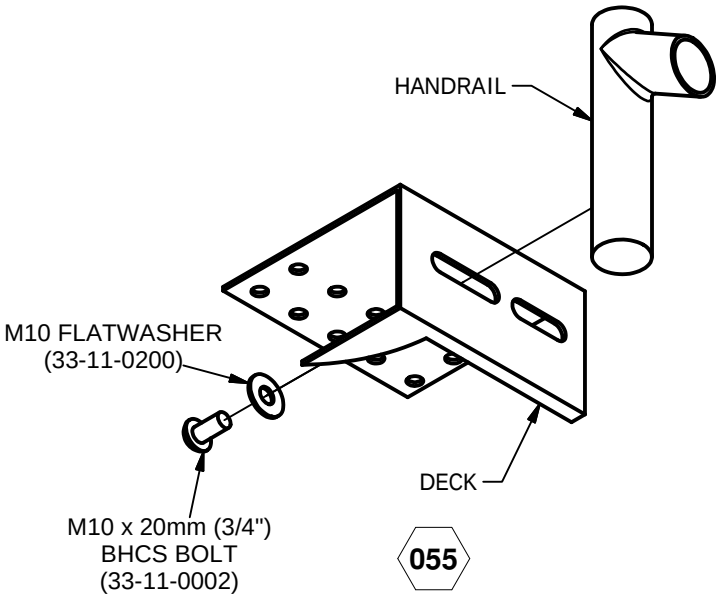

2FT. STAIRS 02-07-5020

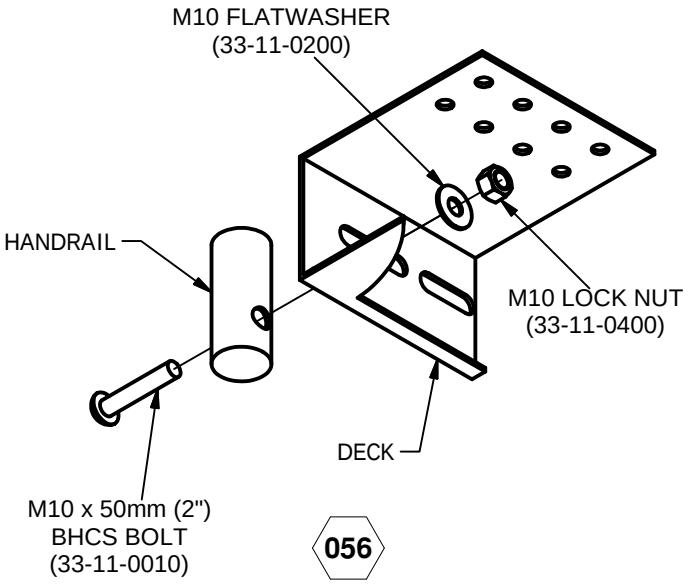

ADA STEPS 02-07-5000

Parts List		
DESCRIPTION	QTY	PART NUMBER
ADA BARRIER LEFT	1	02-07-0008
ADA BARRIER RIGHT	1	02-07-0010
1" FOOTER	4	02-07-0043
ADA TRANSFER STAIR	1	02-07-0005
ADA DECK	1	02-07-0004
ADA DECK SUPPORT POST	1	02-07-0047
ADA HANDHOLD	1	02-07-0011
ADA STEP	1	02-07-0006
8 1/4" EXTENSION POST	2	02-07-0060
15" EXTENSION POST	2	02-07-0061
FOOTER PLATE	2	02-07-0046
HARDWARE COMPLETE	1	33-12-0079
M10 x 25mm (1") BHCS BOLT	13	33-11-0003*
M10 x 35mm (1 3/8") BHCS BOLT	8	33-11-0005*
M10 x 50mm (2") BHCS BOLT	4	33-11-0010*
M10 x 60mm (2 3/8") BHCS BOLT	2	33-11-0007*
M10 FLATWASHER	32	33-11-0200*
M10 LOCK NUT	27	33-11-0400*
M8 x 25mm (1") BHCS BOLT	12	33-11-0103*
M8 LOCKWASHER	4	33-11-0301*
M8 LOCK NUT	8	33-11-0500*
CLAMP RIVET	4	33-11-0700*

Unless Otherwise Specified, All Units of Measure are Each
Items listed below Hardware Complete line are included with Hardware Complete Number

Warning: During Installation, Hardware And Small Parts Are Choking Hazards For Young Children. Store Unused Parts Appropriately Until Assembly Is Completed. Once Assembly Is Completed, Remove Any Unused Parts From The Play Environment And Dispose/Save Them In A Secure Location. Any bolt end protruding more than two full threads beyond the face of the nut causes risk of clothing entanglement. Promptly cut-off flush, file smooth, and treat to prevent corrosion.

Note: Peen Tee-Nuts and Flatwashers to match radius of pipe after assembly is complete.
Note: Loctite (supplied by others) should be used on any non-patch hardware.

INSTALLATION INSTRUCTIONS:

IMPORTANT: DETERMINE WHICH MOUNTING OPTION YOU ARE USING; SURFACE MOUNT, ONGROUND, OR IN-GROUND.

1. Choose the appropriate hole in Barrier Footer for your surfacing application.

2. Attach ADA Barriers to Barrier Footers using M10 x 35mm B.H.C.S. Bolt and M10 Lock Nut. See Detail 028.

3. Attach ADA Barriers to Tube Clamps using M8 x 25mm B.H.C.S Bolt and M8 Lock Washer. See Detail 029.

4. Attach Tube Clamps to Uprights using M8 x 25mm B.H.C.S. Bolt and M8 Lock Nut. See Detail 030. (Do not install Clamp Rivet until entire unit is assembled)

5. Clean all slots in stairs, decks, and steps with utility knife if necessary.

6. Attach ADA Transfer Step to Deck using M10 x 25mm B.H.C.S. Bolt, M10 Flat Washer, and M10 Lock Nut. See Detail 031.

ADA STEPS 02-07-5000

7. Attach ADA Transfer Step to ADA Barriers using M10 x 25mm B.H.C.S. Bolt, M10 Flat Washer, and M10 Lock Nut. See Detail 032.

8. Attach Barrier Footer to ADA Deck Support using M10 x 35mm B.H.C.S. Bolt and M10 Lock Nut. See Detail 028.

9. Attach ADA Deck Support to under side of ADA Deck using M10 x 35 B.H.C.S. Bolt, M10 Flat Washer, and M10 Lock Nut. See Detail 031.

10. Insert Barrier Footer into ADA Handhold and secure using M10 x 35mm B.H.C.S. Bolt and M10 Lock Nut. See Detail 028.

11. Attach ADA Handhold to side of ADA Deck using M10 x 60mm B.H.C.S. Bolt, M10 Flat Washer, and M10 Lock Nut. See Detail 034.

12. Position assembly in dug holes and attach to ADA Transfer Stairs using M10 x 25mm B.H.C.S. Bolt, M10 Flat Washer, and M10 Lock Nut. See Detail 031.

NOTE: **There are (2) lengths of Extension Posts included in your installation kit. Use the 15" Extension Post for the Engineered Wood Fiber and 8 1/4" Extension Post for 2" Rubber Titles or Poured-in-place surfacing.**

13. Insert Footer Plate into Extension Post and secure using M10 x 35mm B.H.C.S. Bolt and M10 Lock Nut. See Detail 036.

14. Attach Extension Post to ADA Step using M10 x 50mm B.H.C.S. Bolt, M10 Flat Washer, and M10 Lock Nut. See Detail 035.

15. Position ADA Step with Extension Post in dug holes and attach to ADA Deck using M10 x 25mm B.H.C.S. Bolt, M10 Flat Washer, and M10 Lock Nut. See Detail 031.

16. Plumb and level entire assembly before tightening all fasteners. NOTE: Apply Loctite to threads of Bolts to prevent from loosening.

MAINTENANCE PROCEDURE:

Periodically check hardware for tightness, and tighten as necessary. Always check all parts for breakage or wear, and immediately put equipment out of service until any faulty parts found are repaired or replaced. Also Check all metal parts for rust, paint loss and touch-up if necessary with paint. Check for welded areas and verify integrity. Check periodically resilient surfacing for appropriate depth and remove extraneous materials that could cause injury, infection, or disease. Maintain detailed installation, inspection, maintenance, and repair records for each public-use playground equipment.

ADA STEPS 02-07-5000

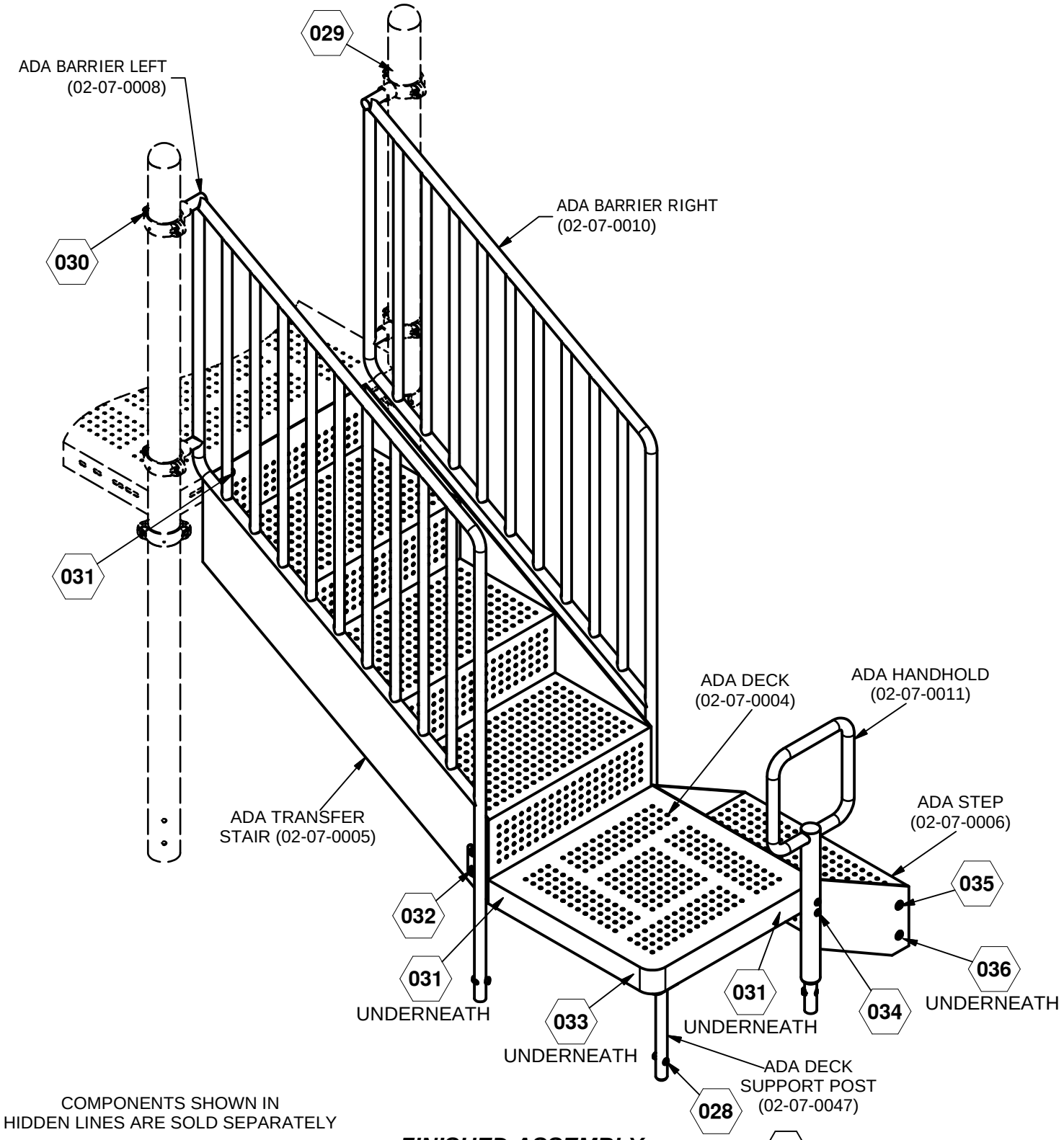

COMPONENTS SHOWN IN
HIDDEN LINES ARE SOLD SEPARATELY

FINISHED ASSEMBLY

= INSTALLATION DETAIL

Issued/Revised: 04/22/13

ADA STEPS 02-07-5000

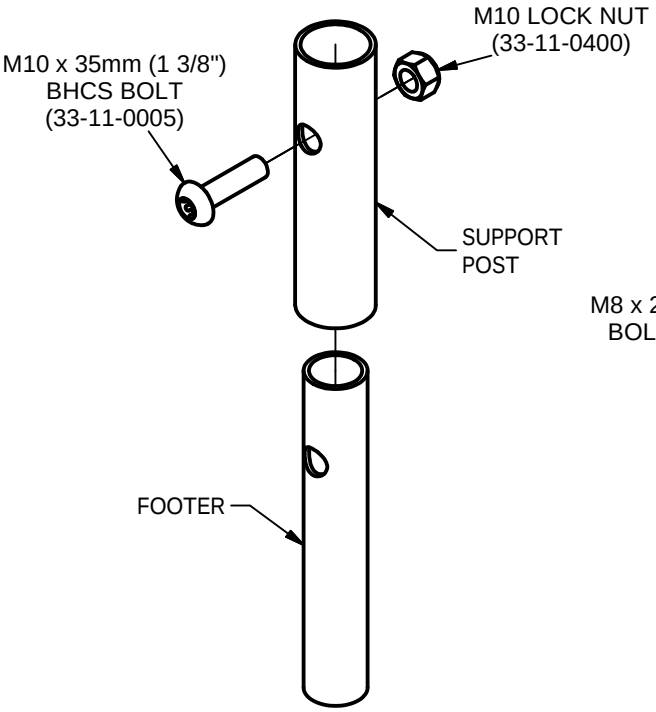

028

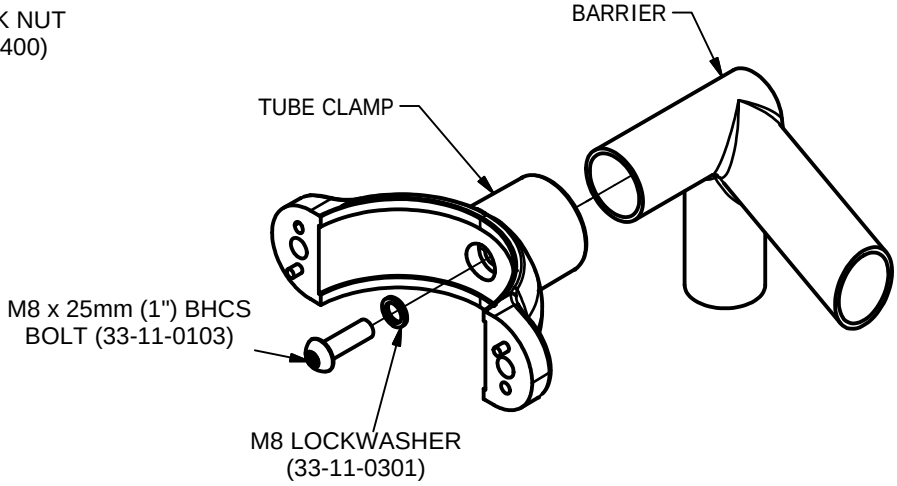

029

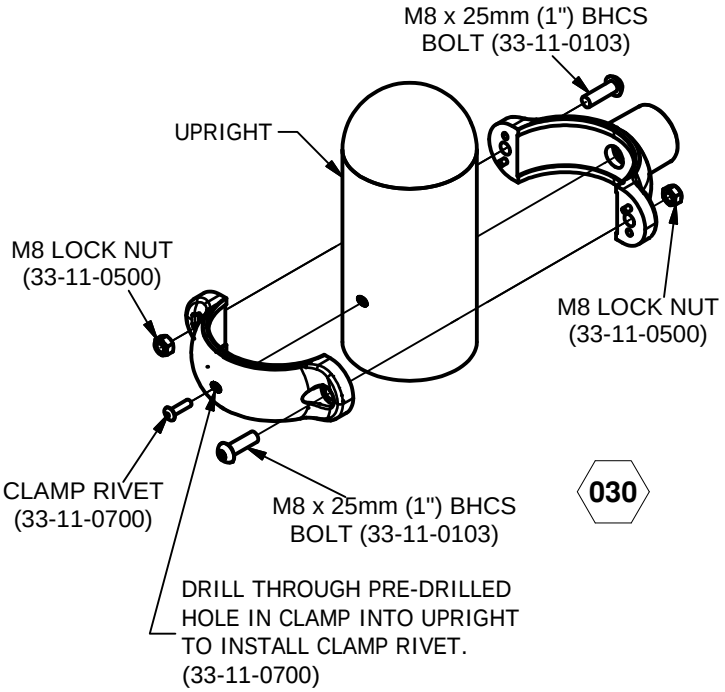

030

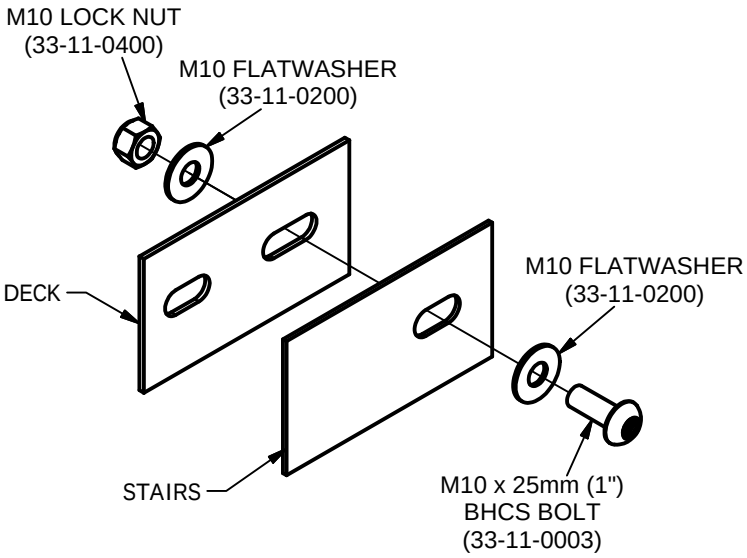

031

Issued/Revised: 04/22/13

ADA STEPS 02-07-5000

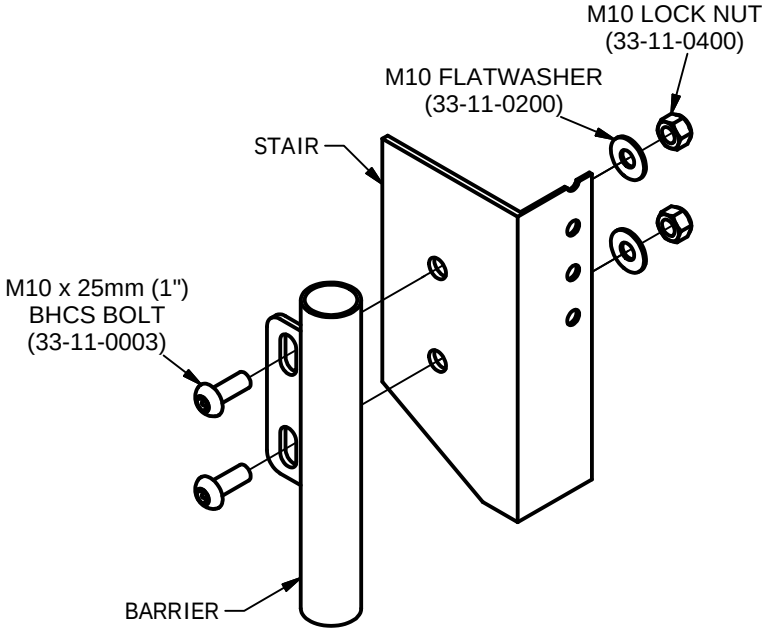

032

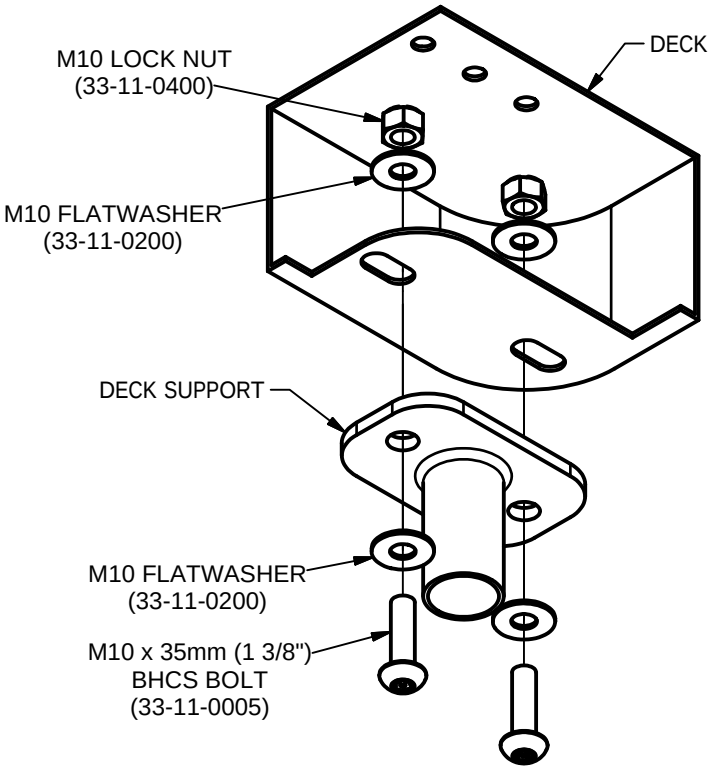

033

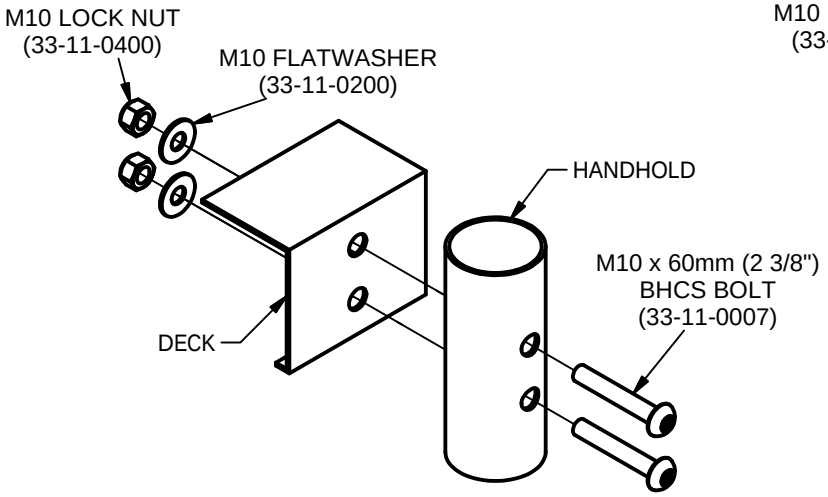

034

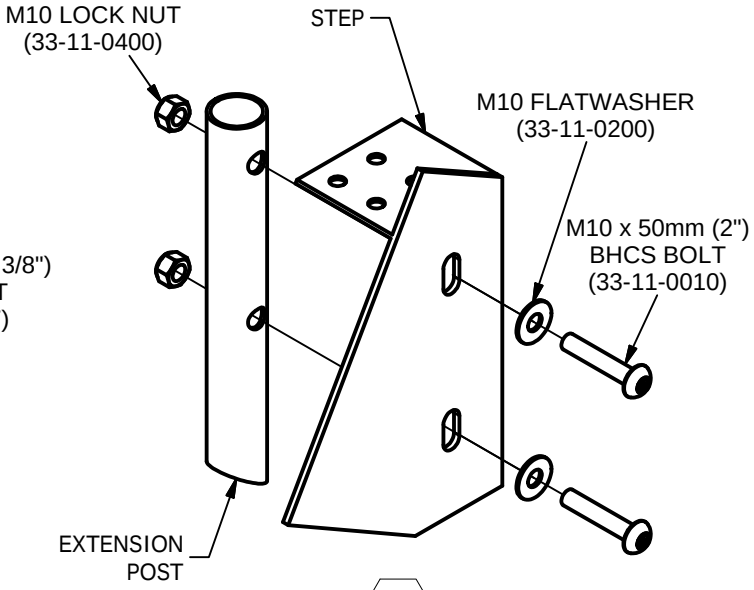

035

ADA STEPS 02-07-5000

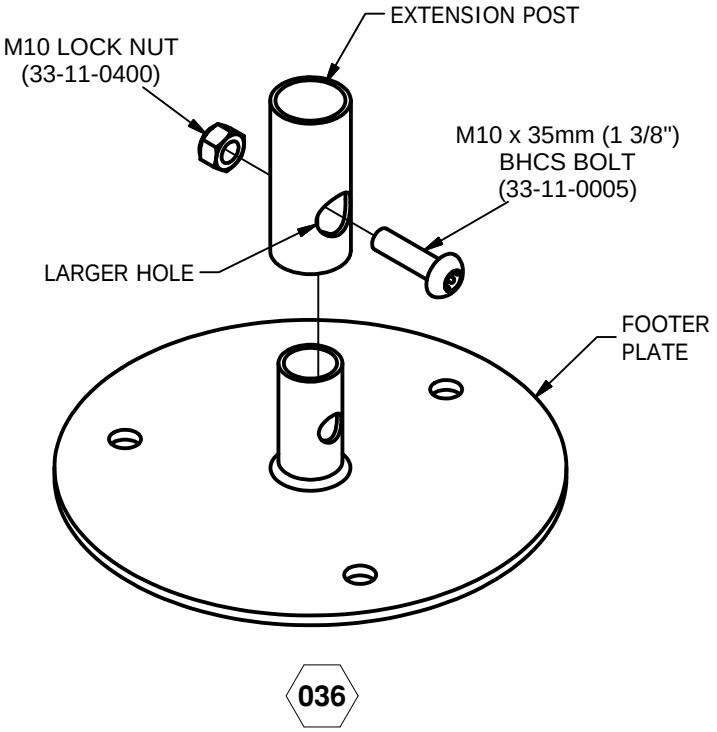

PANEL CLAMP - SINGLE 02-07-0040

Parts List		
DESCRIPTION	QTY	PART NUMBER
PANEL CLAMP	1	02-07-0040

Unless Otherwise Specified, All Units of Measure are Each
Items listed below Hardware Complete line are included with Hardware Complete Number

Warning: During Installation, Hardware And Small Parts Are Choking Hazards For Young Children. Store Unused Parts Appropriately Until Assembly Is Completed. Once Assembly Is Completed, Remove Any Unused Parts From The Play Environment And Dispose/Save Them In A Secure Location. Any bolt end protruding more than two full threads beyond the face of the nut causes risk of clothing entanglement. Promptly cut-off flush, file smooth, and treat to prevent corrosion.

Note: Peen Tee-Nuts and Flatwashers to match radius of pipe after assembly is complete.
Note: Loctite (supplied by others) should be used on any non-patch hardware.

INSTALLATION INSTRUCTIONS:

1. Attach Panel Clamp to Upright using M8 x 25mm B.H.C.S. and M8 Lock Nut. See Detail 025.

IMPORTANT: HARDWARE INCLUDED IN COMPONENTS.

2. Once assembly is complete, plumb and level structure and tighten all fasteners securely. Drill Ø1/4" hole through the clamp and upright. Insert Clamp Rivet into drilled hole and tap into place with hammer. See Detail 025.

MAINTENANCE PROCEDURE:

Periodically check hardware for tightness, and tighten as necessary. Always check all parts for breakage or wear, and immediately put equipment out of service until any faulty parts found are repaired or replaced. Also Check all metal parts for rust, paint loss and touch-up if necessary with paint. Check for welded areas and verify integrity. Check periodically resilient surfacing for appropriate depth and remove extraneous materials that could cause injury, infection, or disease. Maintain detailed installation, inspection, maintenance, and repair records for each public-use playground equipment.

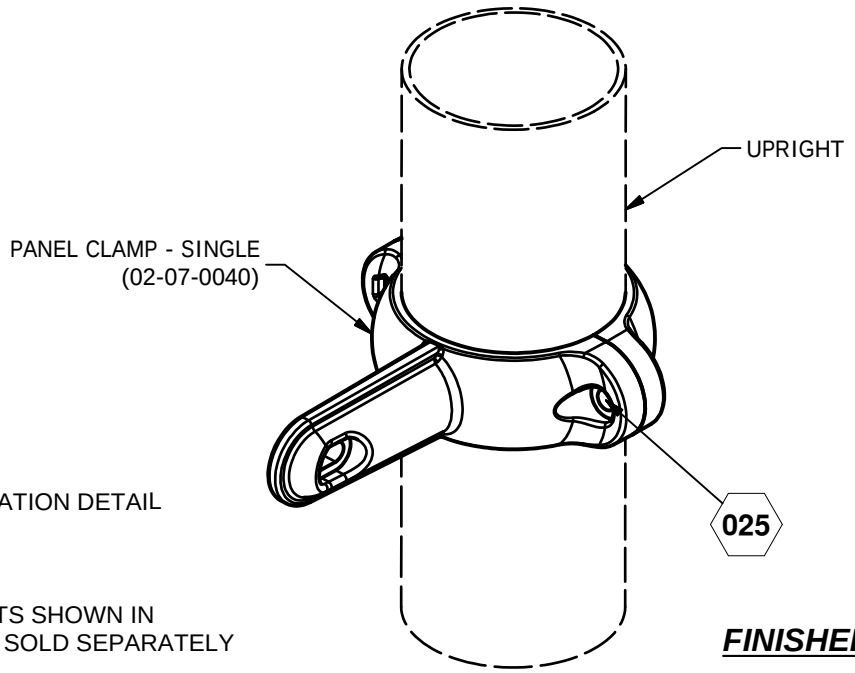

= INSTALLATION DETAIL

COMPONENTS SHOWN IN
HIDDEN LINES ARE SOLD SEPARATELY

FINISHED ASSEMBLY

PANEL CLAMP - SINGLE 02-07-0040

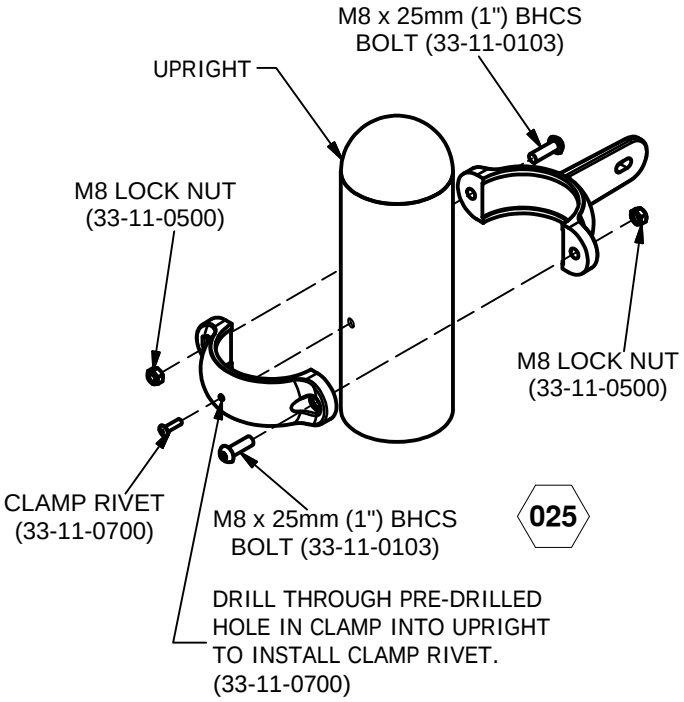

4FT. STRAIGHT SLIDE 02-07-5004

Parts List		
DESCRIPTION	QTY	PART NUMBER
STRAIGHT SLIDE	1	02-07-0026
MOUNTING BRACKET	1	02-07-0045
EXTENSION TUBE	1	02-07-0044
FOOTER PLATE	1	02-07-0046
SLIDE HOOD	1	02-07-0025
HARDWARE COMPLETE	1	33-12-0071
M10 x 20mm (3/4") BHCS BOLT	5	33-11-0002*
M12 LOCKWASHER	7	33-11-0203*
M10 FLATWASHER	7	33-11-0200*
M10 x 35mm (1 3/8") BHCS BOLT	2	33-11-0005*
M10 LOCK NUT	2	33-11-0400*
M10 x 60mm (2 3/8") BHCS BOLT	2	33-11-0007*
M8 x 40mm (1 9/16") BHCS BOLT	2	33-11-0106*
M8 FLATWASHER	4	33-11-0300*
M8 LOCK NUT	6	33-11-0500*
M8 x 20mm (3/4") BHCS BOLT	2	33-11-0102*
M8 BARREL NUT	2	33-11-0501*
M8 x 25mm (1") BHCS BOLT	4	33-11-0103*
CLAMP RIVET	2	33-11-0700*

Unless Otherwise Specified, All Units of Measure are Each
Items listed below Hardware Complete line are included with Hardware Complete Number

Warning: During Installation, Hardware And Small Parts Are Choking Hazards For Young Children. Store Unused Parts Appropriately Until Assembly Is Completed. Once Assembly Is Completed, Remove Any Unused Parts From The Play Environment And Dispose/Save Them In A Secure Location. Any bolt end protruding more than two full threads beyond the face of the nut causes risk of clothing entanglement. Promptly cut-off flush, file smooth, and treat to prevent corrosion.

Note: Peen Tee-Nuts and Flatwashers to match radius of pipe after assembly is complete.
Note: Loctite (supplied by others) should be used on any non-patch hardware.

INSTALLATION INSTRUCTIONS:

IMPORTANT: DETERMINE WHICH MOUNTING OPTION YOU ARE USING; SURFACE MOUNT, ONGROUND, OR IN-GROUND.

1. Locate Slide and attach Mounting Bracket using M10 x 20mm B.H.C.S, M12 Lock Washer, and M10 Flat Washer. See Detail 057.

2. Attach Extension Tube to Mounting Bracket using M10 x 35mm B.H.C.S. and M10 Lock Nut. See Detail 014.

NOTE: DISCARD EXTENSION TUBE IF USING 2" POURED-IN-PLACE OR RUBBER TILE APPLICATIONS AND BOLT MOUNTING BRACKET DIRECTLY TO FOOTER PLATE.

3. Insert Footer Plate into Extension Tube and secure using M10 x 35mm B.H.C.S. and M10 Lock Nut. See Detail 036.

4. Clean out slots in Deck with utility knife if necessary.

5. Attach Slide to Deck using M10 x 20mm B.H.C.S, M12 Lock Washer, and M10 Flat Washer. See Detail 058.

6. Attach Slide Hood to Slide using M10 x 60mm B.H.C.S, M12 Lock Washer, and M10 Flat Washer. See Detail 059.

7. Attach Bottom of Slide Hood to Deck using M8 x 40mm B.H.C.S, M8 Flat Washer, and M8 Lock Nut. See Detail 060.

4FT. STRAIGHT SLIDE 02-07-5004

8. Attach Slide Hood to Panel Clamp using M8 x 20mm B.H.C.S. and M8 Barrel Nut. See Detail 061.

9. Close Panel Clamps around Uprights and secure using M8 x 25mm B.H.C.S. and M8 Lock Nut. See Detail 025. (Do not install Clamp Rivet until entire unit is assembled.)

10. Plumb and level entire assembly before tightening all fasteners. NOTE: Apply Loctite to threads of Bolt to prevent from loosening.

MAINTENANCE PROCEDURE:

Periodically check hardware for tightness, and tighten as necessary. Always check all parts for breakage or wear, and immediately put equipment out of service until any faulty parts found are repaired or replaced. Also Check all metal parts for rust, paint loss and touch-up if necessary with paint. Check for welded areas and verify integrity. Check periodically resilient surfacing for appropriate depth and remove extraneous materials that could cause injury, infection, or disease. Maintain detailed installation, inspection, maintenance, and repair records for each public-use playground equipment.

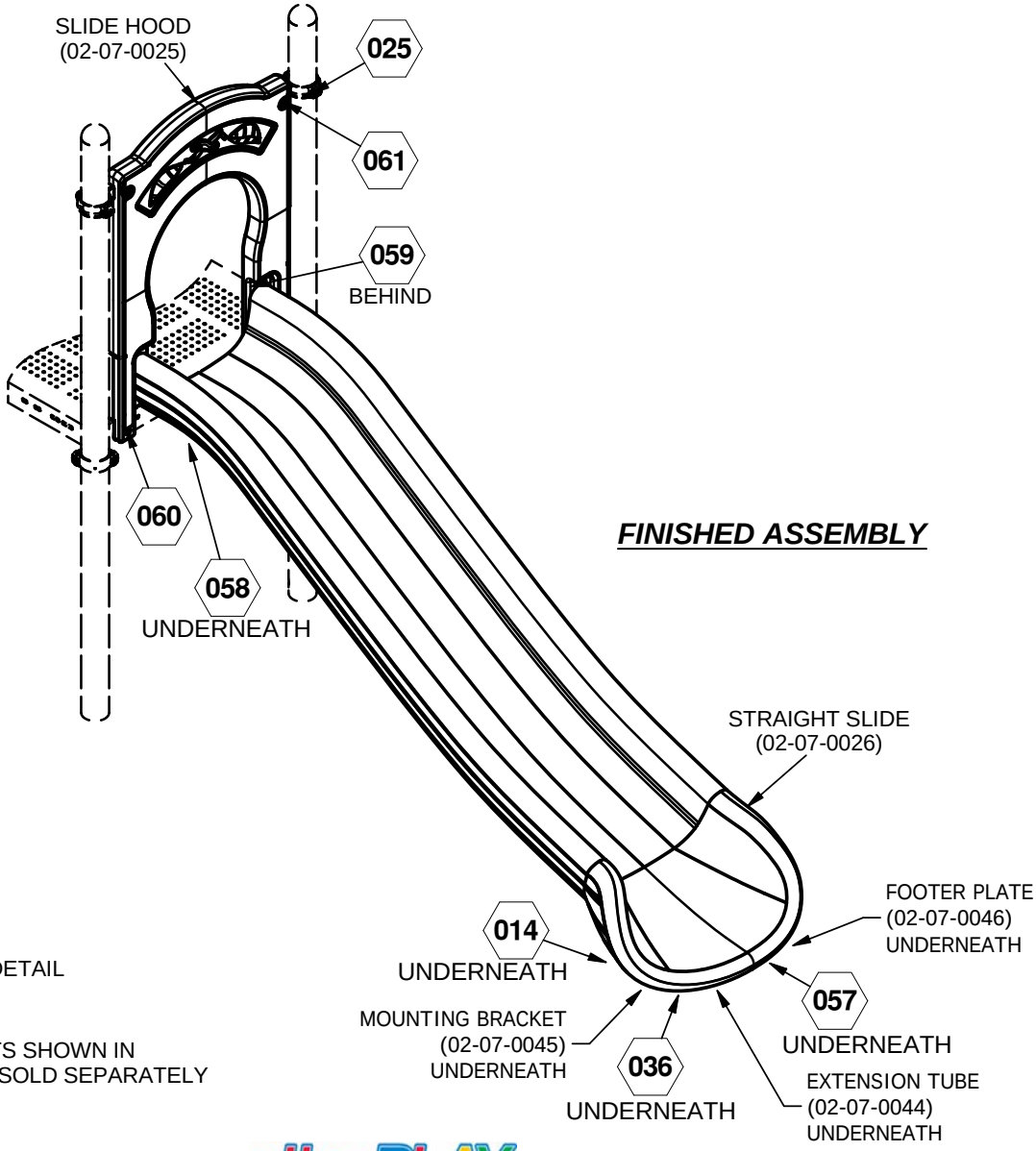

= INSTALLATION DETAIL

COMPONENTS SHOWN IN
HIDDEN LINES ARE SOLD SEPARATELY

Issued/Revised: 05/22/13

4FT. STRAIGHT SLIDE 02-07-5004

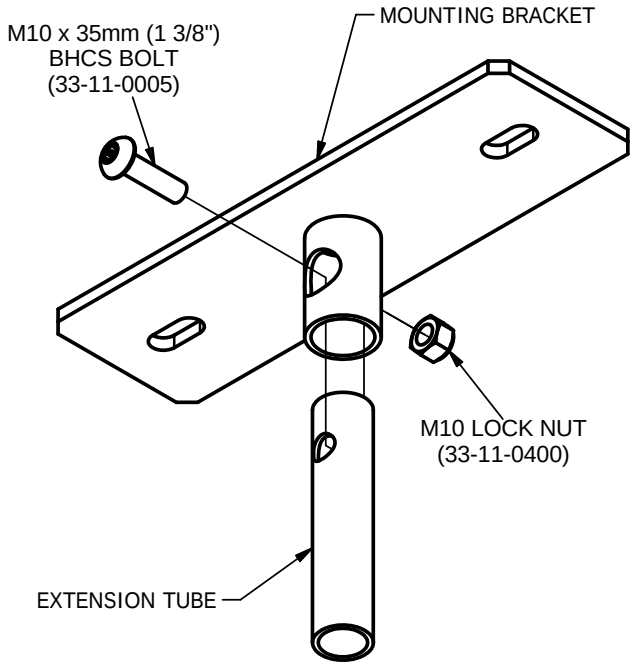

014

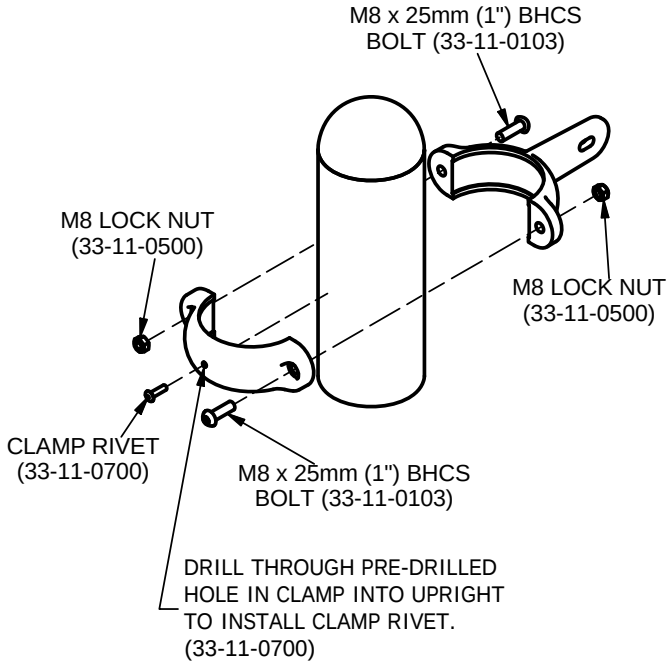

025

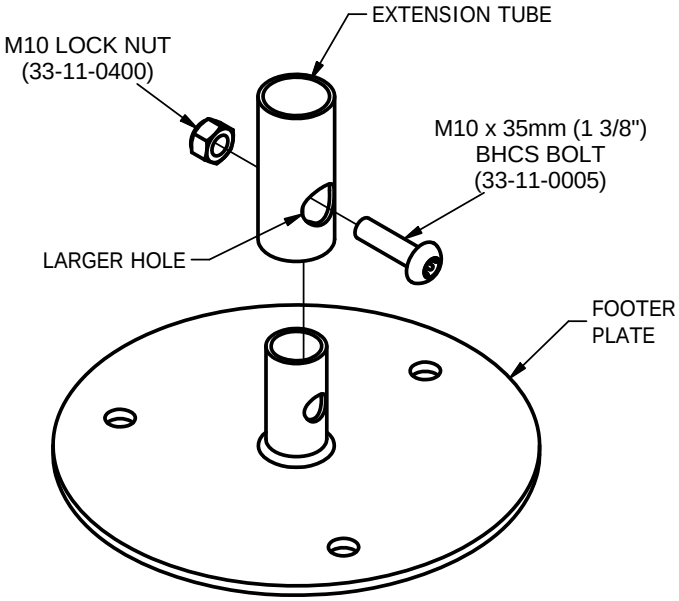

036

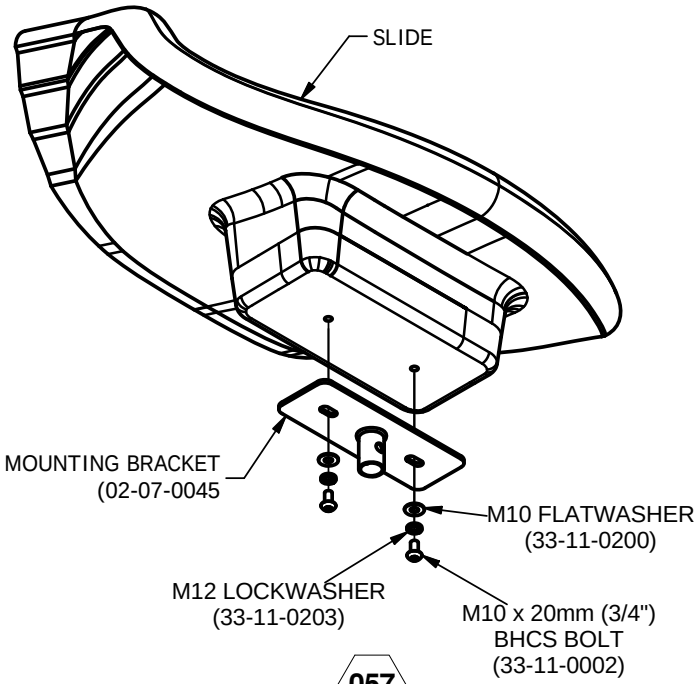

057

Issued/Revised: 05/22/13

4FT. STRAIGHT SLIDE 02-07-5004

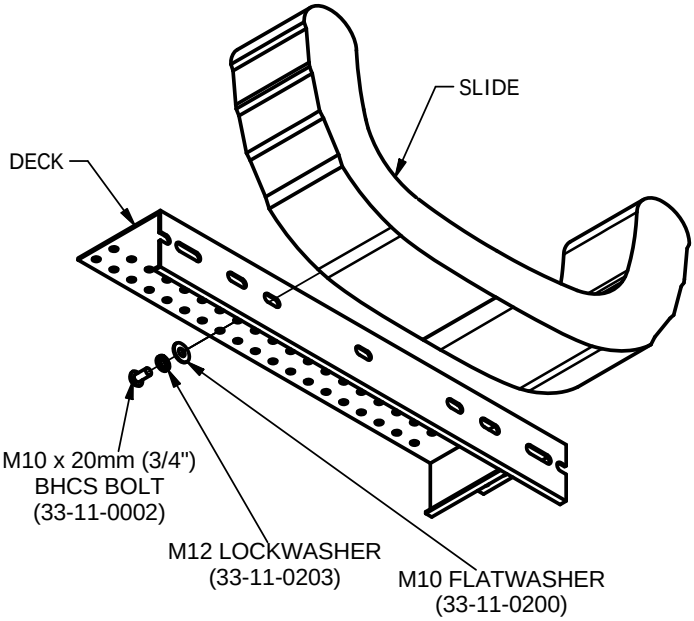

058

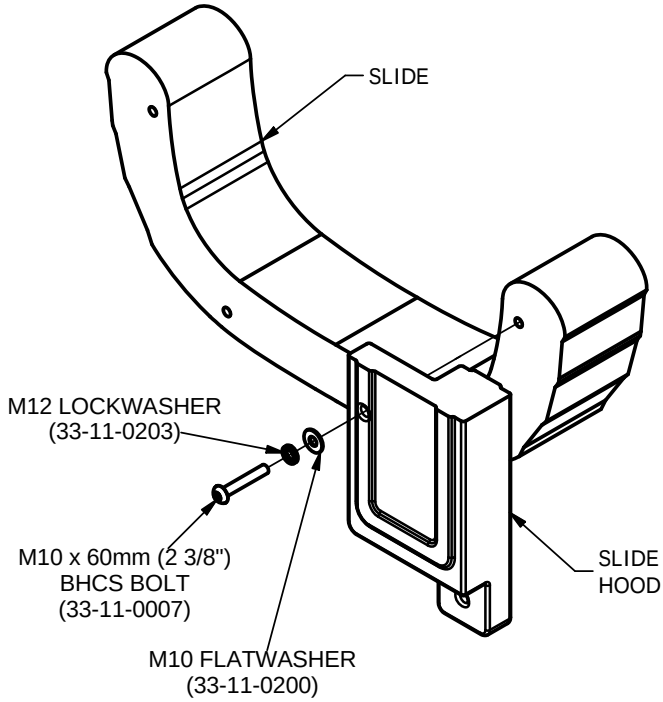

059

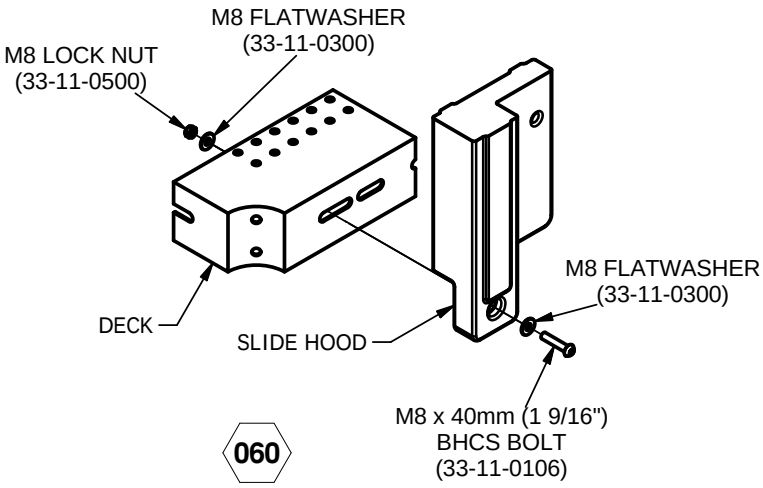

060

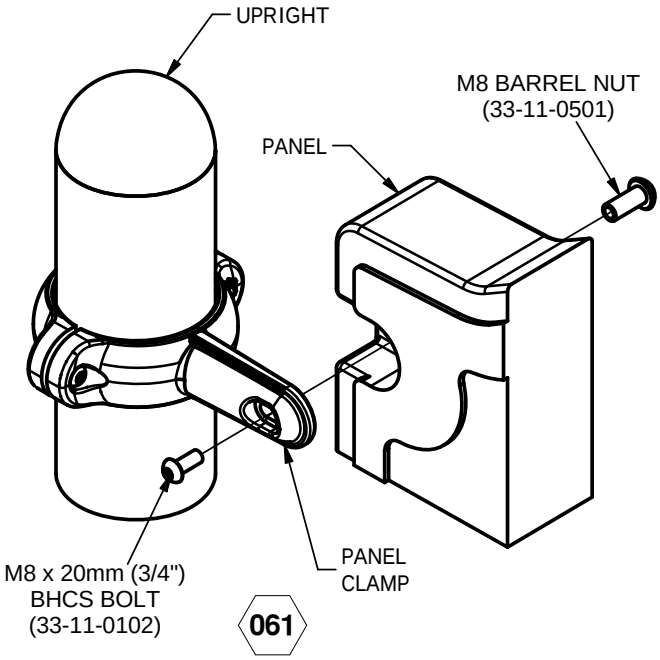

061

ULTRA MOUNTAIN CLIMBER 02-07-5007

Parts List		
DESCRIPTION	QTY	PART NUMBER
ULTRA MOUNTAIN CLIMBER	1	02-07-0034
ULTRA MOUNTAIN CLIMBER DECK MOUNTING BAR	1	02-07-0090
LONG ULTRA MOUNTAIN CLIMBER SUPPORT	1	02-07-0036
1" FOOTER	2	02-07-0043
FOOTER PLATE	2	02-07-0046
SHORT ULTRA MOUNTAIN CLIMBER SUPPORT	1	02-07-0035
EXTENSION TUBE	2	02-07-0044
TUBE CLAMP	4	02-07-0039
GRAB BAR	2	02-07-0033
HARDWARE COMPLETE	1	33-12-0078
M10 x 30mm (1 3/16") BHCS BOLT	2	33-11-0004*
M10 x 70mm (2 3/4") BHCS BOLT	9	33-11-0008*
M10 FLATWASHER	20	33-11-0200*
M10 x 35mm (1 3/8") BHCS BOLT	6	33-11-0005*
M10 LOCK NUT	17	33-11-0400*
M8 x 25mm (1") BHCS BOLT	12	33-11-0103*
M8 LOCKWASHER	4	33-11-0301*
M8 LOCK NUT	8	33-11-0500*
CLAMP RIVET	4	33-11-0700*

Unless Otherwise Specified, All Units of Measure are Each
Items listed below Hardware Complete line are included with Hardware Complete Number

Warning: During Installation, Hardware And Small Parts Are Choking Hazards For Young Children. Store Unused Parts Appropriately Until Assembly Is Completed. Once Assembly Is Completed, Remove Any Unused Parts From The Play Environment And Dispose/Save Them In A Secure Location. Any bolt end protruding more than two full threads beyond the face of the nut causes risk of clothing entanglement. Promptly cut-off flush, file smooth, and treat to prevent corrosion.

Note: Peen Tee-Nuts and Flatwashers to match radius of pipe after assembly is complete.
Note: Loctite (supplied by others) should be used on any non-patch hardware.

INSTALLATION INSTRUCTIONS:

IMPORTANT: DETERMINE WHICH MOUNTING OPTION YOU ARE USING; SURFACE MOUNT, ONGROUND, OR IN-GROUND.

1. Trim out slots with utility knife if necessary.

2. Using 3rd slot from each end of Deck attach Mounting Bar using M10 x 30mm B.H.C.S. Bolt, M10 Flat Washer, and M10 Lock Nut. See Detail 045.

3. Choose the appropriate hole in Handrail Footer for your surfacing application. Insert Handrail Footer into Long Climber Support and secure using M10 x 35mm B.H.C.S. Bolt and M10 Lock Nut. See Detail 028.

NOTE: EXTENSION TUBES ARE USED WITH 12" ENGINEERED WOOD FIBER SURFACING ONLY. DISCARD EXTENSION TUBE IF USING 2" RUBBER TILES OR POURED-IN-PLACE SURFACING AND BOLT DIRECTLY TO FOOTER PLATE.

4. Insert Extension Tube into Short Climber Support and secure using M10 x 35mm B.H.C.S. Bolt and M10 Lock Nut. See Detail 028.

5. Attach Extension Tube to Footer Plate using M10 x 35mm B.H.C.S. Bolt and M10 Lock Nut. See Detail 036.

ULTRA MOUNTAIN CLIMBER 02-07-5007

6. Place Climber Support in position. Place Ultra Mountain Climber on Climber Supports and mark holes of Support. Drill (9) 3/8" Holes into Ultra Mountain Climber.

7. Attach Ultra Mountain Climber to Deck Mounting Bar and Climber Supports using M10 x 70mm B.H.C.S. Bolt, M10 Flat Washer, and M10 Lock Nut. See Detail 046.

***IMPORTANT:* BOLTS MUST BE CUT OFF IF MORE THAN (2) THREADS EXTEND BEYOND NUT WHEN TIGHTENED.**

***NOTE:* THE VERTICAL POSITION OF THE GRAB BARS MUST BE A MINIMUM OF 38" ABOVE THE DECK. THE CLAMP POSITION CAN BE ADJUSTED HIGHER TO AVOID INTERFERENCE WITH OTHER CLAMPS.**

8. Attach Tube Clamp to Upright using M8 x 25mm B.H.C.S. Bolt and M8 Lock Nut. Once all clamps are on and secure drill Ø1/4" hole through Clamp and Upright to install Clamp Rivet. See Detail 030.

9. Plumb and level entire assembly before tightening all fasteners. NOTE: Apply Loctite to threads of Bolt to prevent from loosening.

MAINTENANCE PROCEDURE:

Periodically check hardware for tightness, and tighten as necessary. Always check all parts for breakage or wear, and immediately put equipment out of service until any faulty parts found are repaired or replaced. Also Check all metal parts for rust, paint loss and touch-up if necessary with paint. Check for welded areas and verify integrity. Check periodically resilient surfacing for appropriate depth and remove extraneous materials that could cause injury, infection, or disease. Maintain detailed installation, inspection, maintenance, and repair records for each public-use playground equipment.

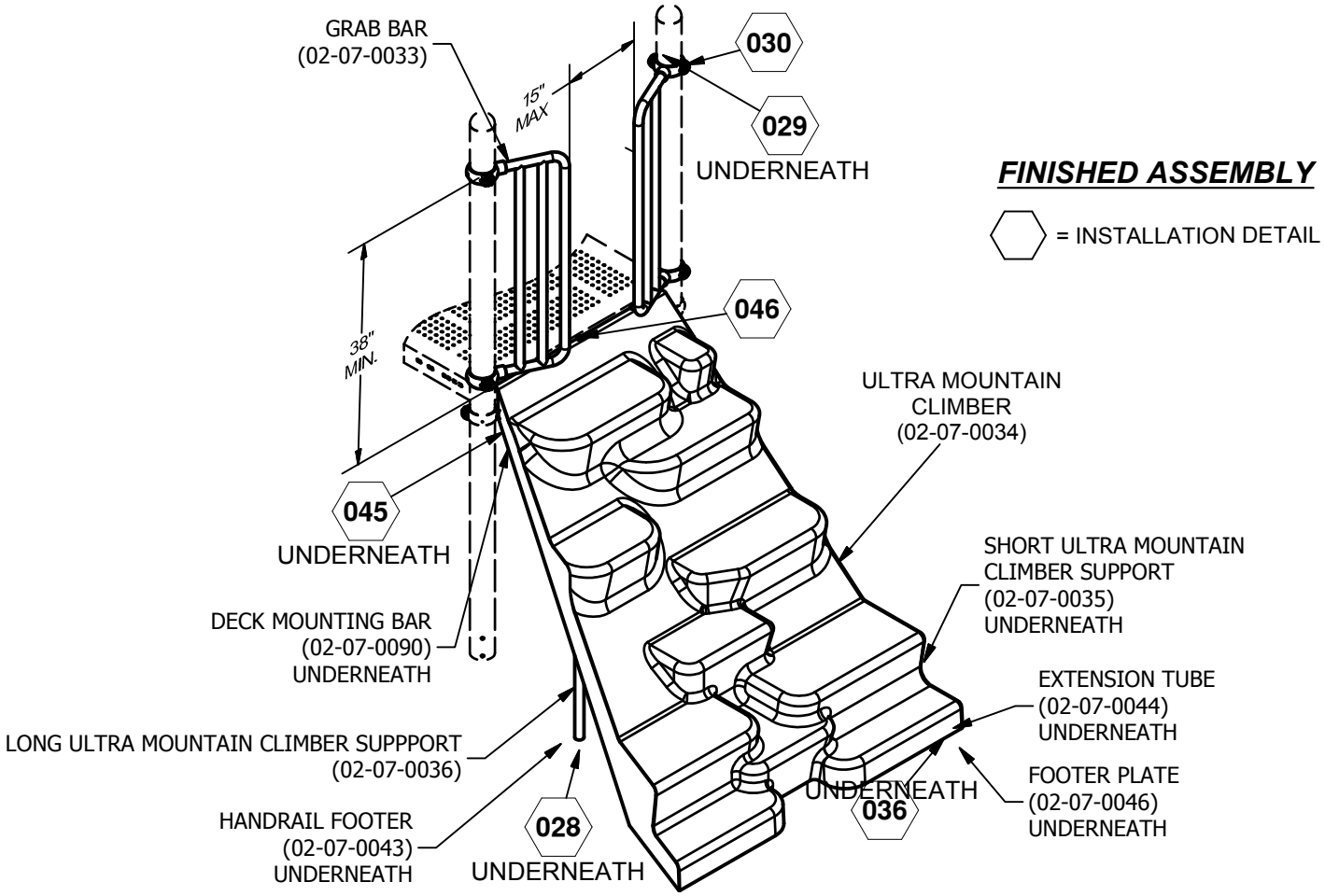

ULTRA MOUNTAIN CLIMBER 02-07-5007

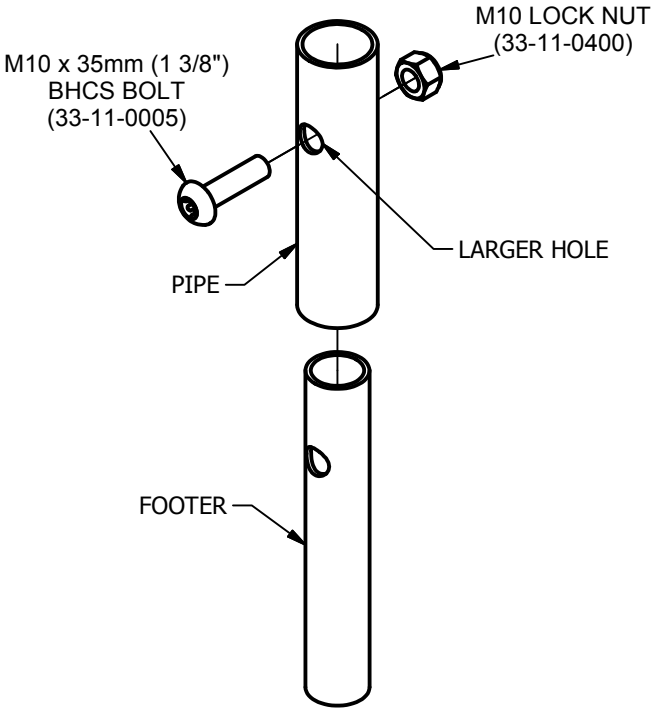

028

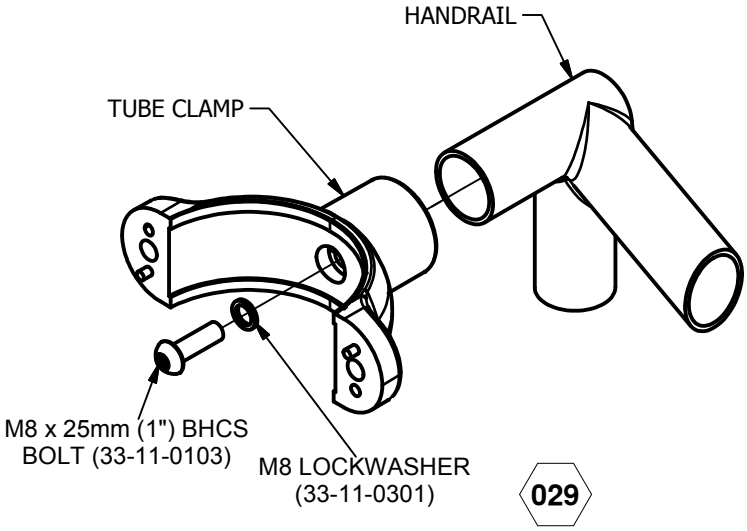

029

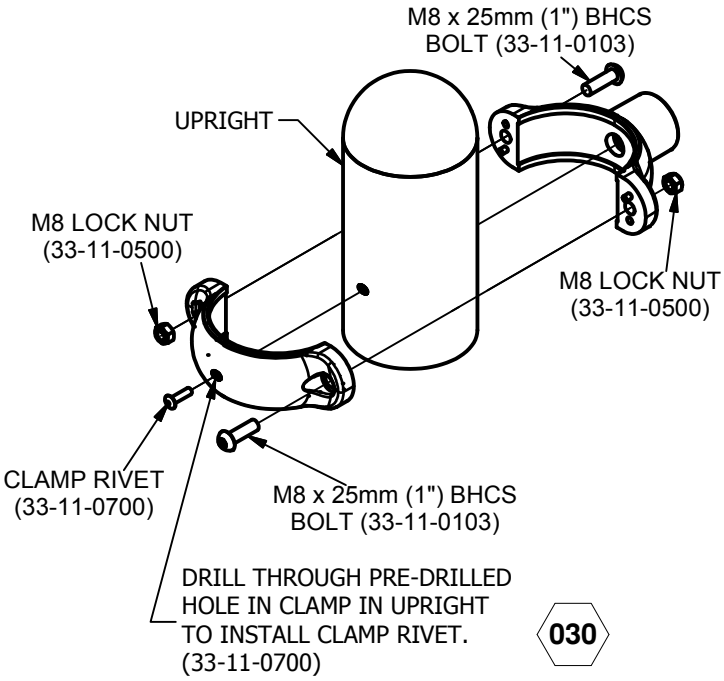

030

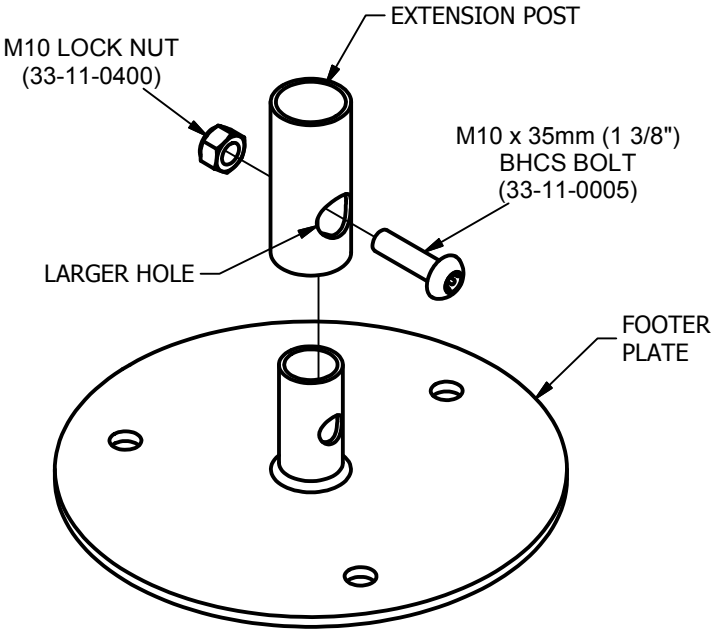

036

ULTRA MOUNTAIN CLIMBER 02-07-5007

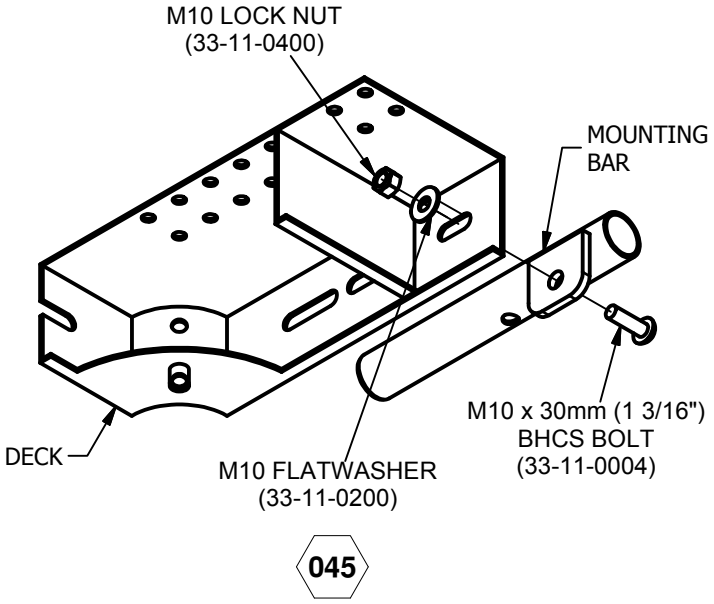

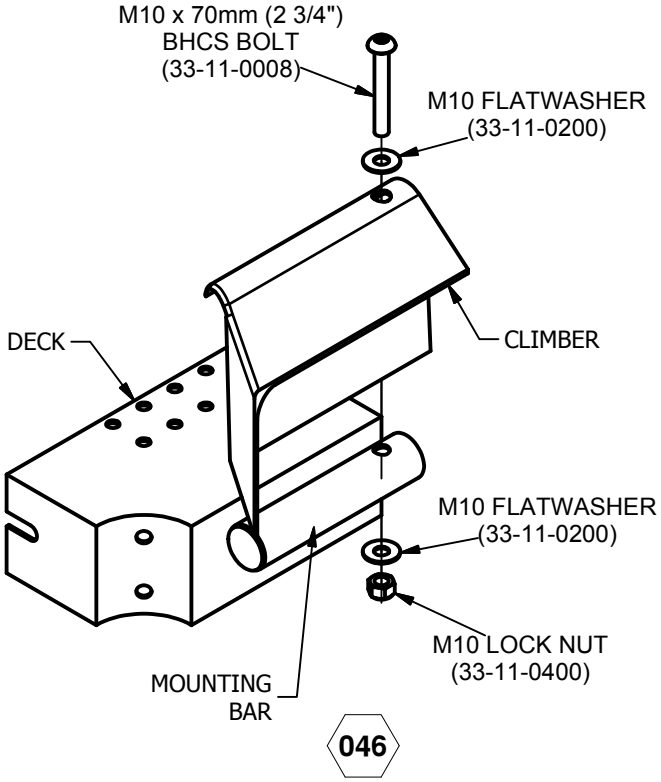

PANEL CLAMP 90° - DOUBLE 02-07-0041

Parts List		
DESCRIPTION	QTY	PART NUMBER
PANEL CLAMP 90° DOUBLE	1	02-07-0041

Unless Otherwise Specified, All Units of Measure are Each
Items listed below Hardware Complete line are included with Hardware Complete Number

Warning: During Installation, Hardware And Small Parts Are Choking Hazards For Young Children. Store Unused Parts Appropriately Until Assembly Is Completed. Once Assembly Is Completed, Remove Any Unused Parts From The Play Environment And Dispose/Save Them In A Secure Location. Any bolt end protruding more than two full threads beyond the face of the nut causes risk of clothing entanglement. Promptly cut-off flush, file smooth, and treat to prevent corrosion.

Note: Peen Tee-Nuts and Flatwashers to match radius of pipe after assembly is complete.
Note: Loctite (supplied by others) should be used on any non-patch hardware.

INSTALLATION INSTRUCTIONS:

1. Attach Panel Clamp 90° Double to Upright using M8 x 25mm B.H.C.S. and M8 Lock Nut. See Detail 065.

IMPORTANT: HARDWARE INCLUDED IN COMPONENTS.

2. Once assembly is complete, plumb and level structure and tighten all fasteners securely. Drill Ø1/4" hole through the clamp and upright. Insert Clamp Rivet into drilled hole and tap into place with hammer. See Detail 065.

MAINTENANCE PROCEDURE:

Periodically check hardware for tightness, and tighten as necessary. Always check all parts for breakage or wear, and immediately put equipment out of service until any faulty parts found are repaired or replaced. Also Check all metal parts for rust, paint loss and touch-up if necessary with paint. Check for welded areas and verify integrity. Check periodically resilient surfacing for appropriate depth and remove extraneous materials that could cause injury, infection, or disease. Maintain detailed installation, inspection, maintenance, and repair records for each public-use playground equipment.

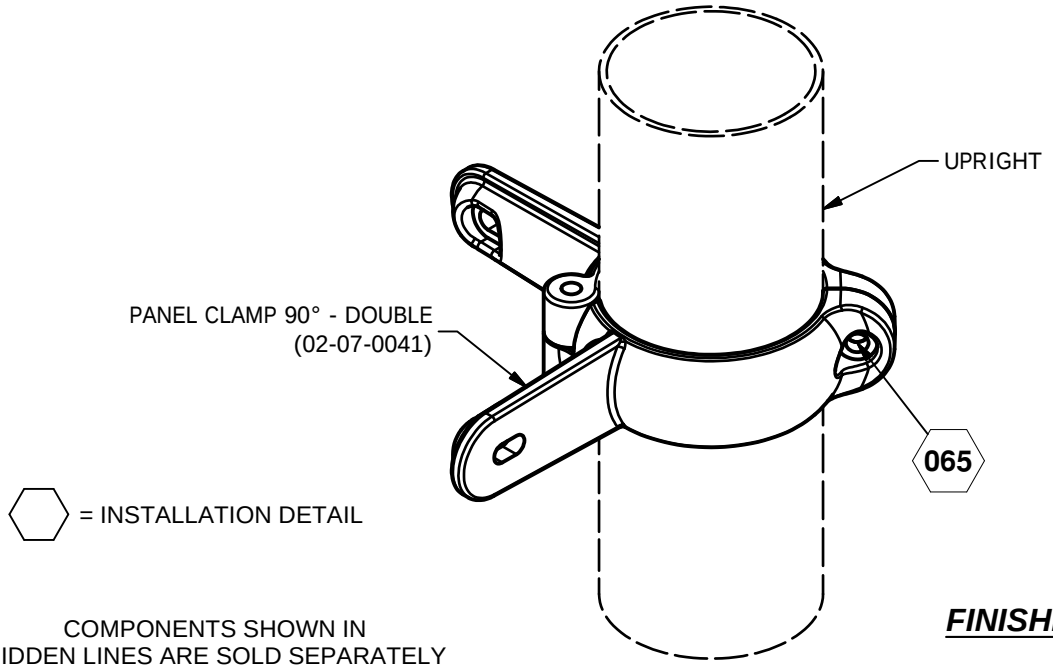

FINISHED ASSEMBLY

PANEL CLAMP 90° - DOUBLE 02-07-0041

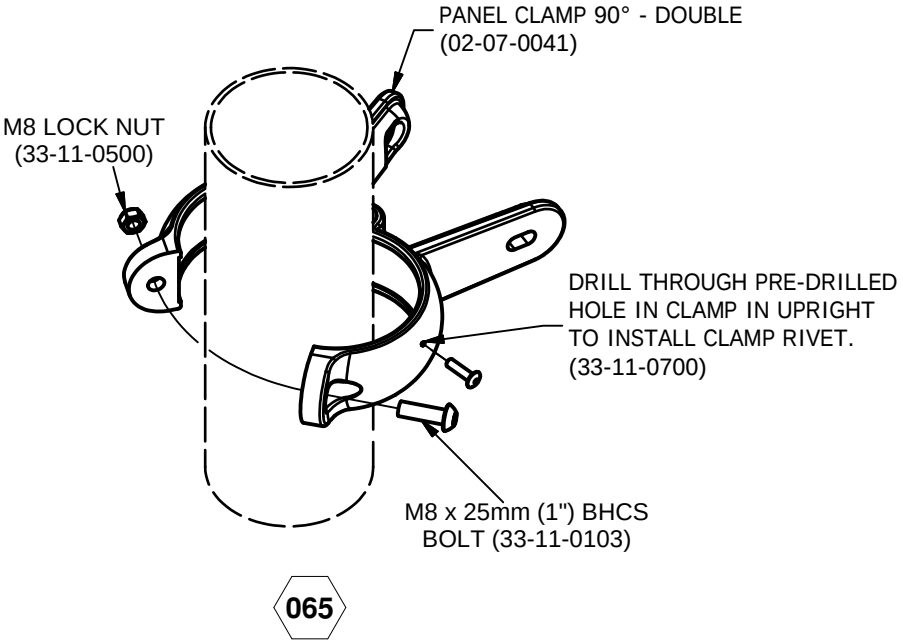

065

WINDOW PANEL 02-07-5010

Parts List		
DESCRIPTION	QTY	PART NUMBER
WINDOW PANEL	1	02-07-0019
HARDWARE COMPLETE	1	33-12-0034
M10 x 20mm (3/4") BHCS BOLT	2	33-11-0002*
M12 LOCKWASHER	2	33-11-0203*
M10 FLATWASHER	2	33-11-0200*
M8 x 25mm (1") BHCS BOLT	4	33-11-0103*
M8 x 55mm (2 3/16") BHCS BOLT	2	33-11-0110*
M8 LOCK NUT	4	33-11-0500*
M8 BARREL NUT	2	33-11-0501*
CLAMP RIVET	2	33-11-0700*

Unless Otherwise Specified, All Units of Measure are Each
**Items listed below Hardware Complete line are included with Hardware Complete Number*

Warning: During Installation, Hardware And Small Parts Are Choking Hazards For Young Children. Store Unused Parts Appropriately Until Assembly Is Completed. Once Assembly Is Completed, Remove Any Unused Parts From The Play Environment And Dispose/Save Them In A Secure Location. Any bolt end protruding more than two full threads beyond the face of the nut causes risk of clothing entanglement. Promptly cut-off flush, file smooth, and treat to prevent corrosion.

Note: Peen Tee-Nuts and Flatwashers to match radius of pipe after assembly is complete.
Note: Loctite (supplied by others) should be used on any non-patch hardware.

INSTALLATION INSTRUCTIONS

1. Place Window Panel against side of Deck. Align bottom holes in Window Panel with slots in Deck.

2. Trim out all slots in Deck with utility knife if necessary.

3. Attach Window Panel to Deck using M10 x 20mm BHCS Bolt, M12 Lock Washer and M10 Flat Washer as shown in Detail 026.

4. With arm of Panel Clamp pointing inward and flat side of arm facing toward Window Panel, Align holes in Panel Clamp with holes in Window Panel. Attach Panel Clamp to Window Panel using M8 x 55mm BHCS Bolt and M8 Barrel Nut. See Detail 027.

5. Place Clamps around Upright. Insert M8 x 25mm BHCS Bolts into Clamp and lightly tighten with M8 Lock Nut. See Detail 025. (Do not install Clamp Rivet until entire unit is assembled.)

6. Plumb and level entire assembly before tightening all fasteners. NOTE: Apply Loctite to threads of Bolts to prevent from loosening.

MAINTENANCE PROCEDURE:

Periodically check hardware for tightness, and tighten as necessary. Always check all parts for breakage or wear, and immediately put equipment out of service until any faulty parts found are repaired or replaced. Also Check all metal parts for rust, paint loss and touch-up if necessary with paint. Check for welded areas and verify integrity. Check periodically resilient surfacing for appropriate depth and remove extraneous materials that could cause injury, infection, or disease. Maintain detailed installation, inspection, maintenance, and repair records for each public-use playground equipment.

WINDOW PANEL 02-07-5010

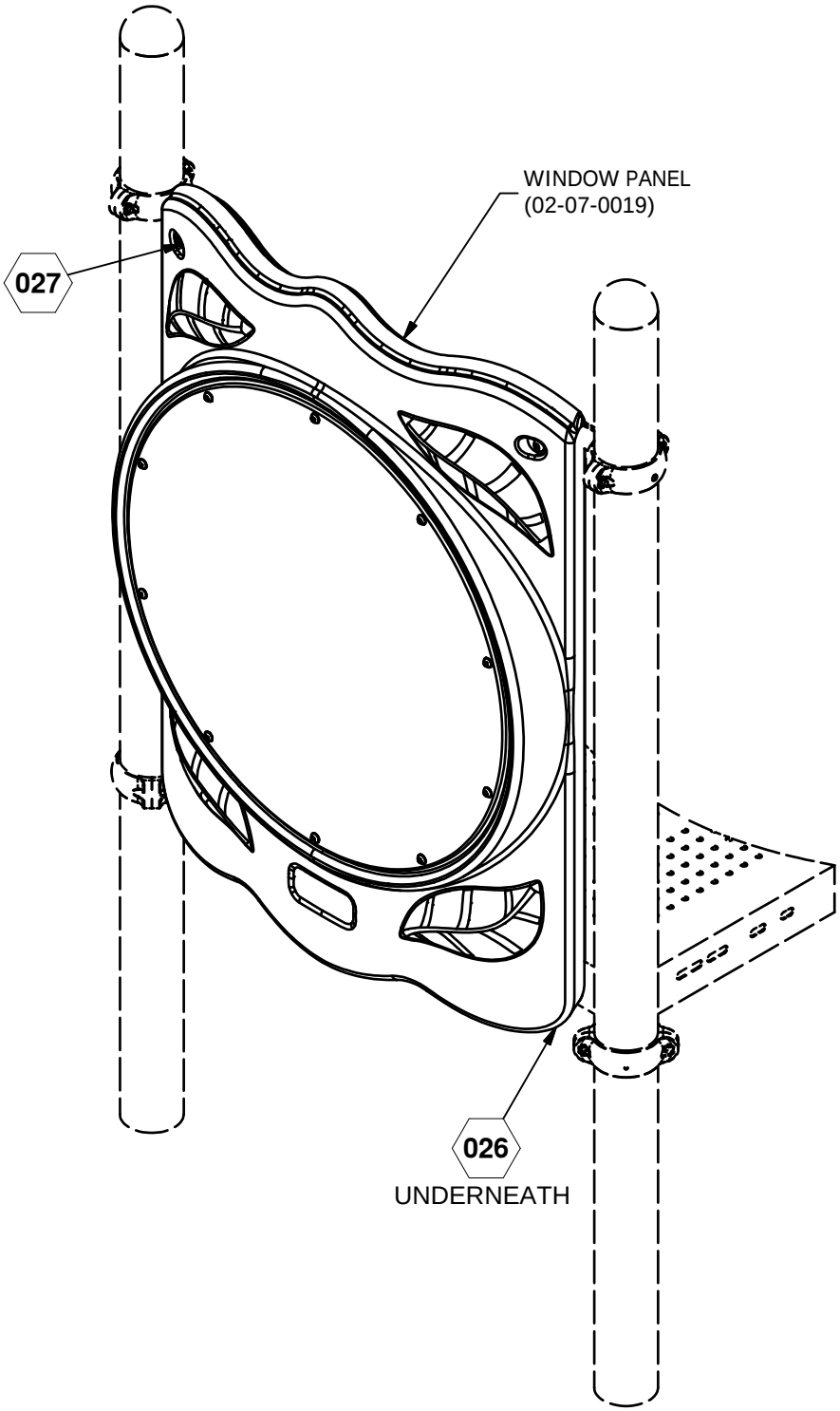

= INSTALLATION DETAIL

FINISHED ASSEMBLY

COMPONENTS SHOWN IN
HIDDEN LINES ARE SOLD SEPARATELY

Issued/Revised: 03/26/13

WINDOW PANEL 02-07-5010

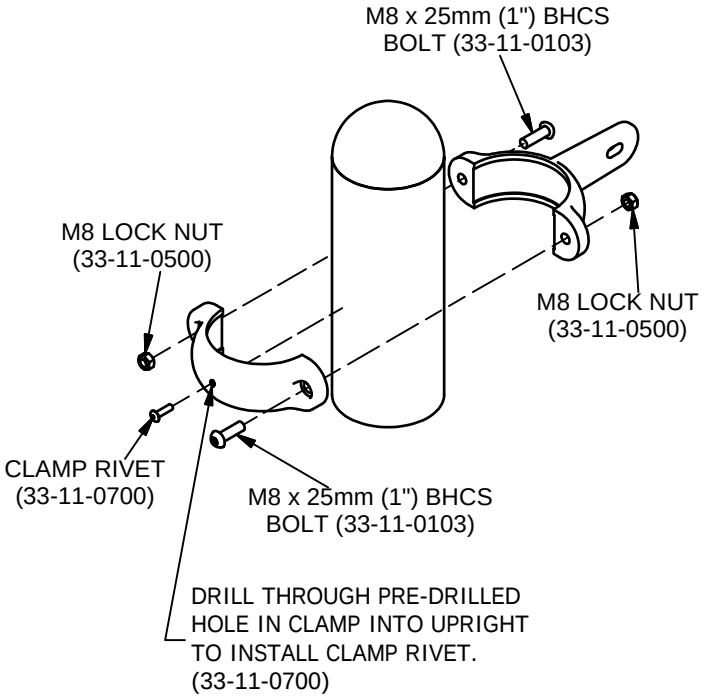

025

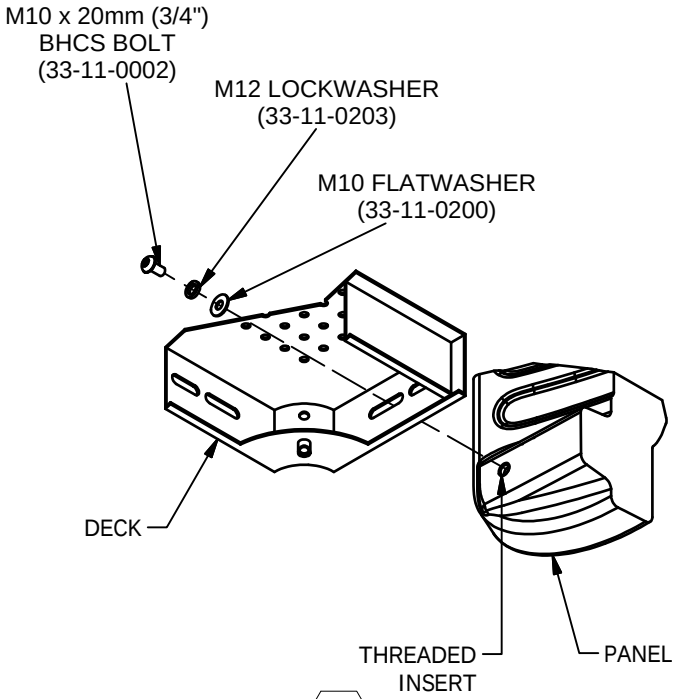

026

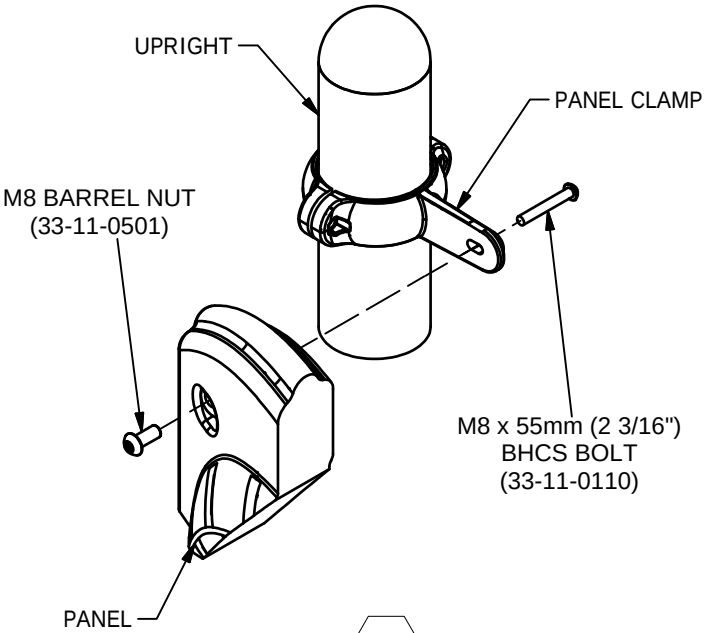

027

6FT. WAVE SLIDE 02-07-5006

Parts List		
DESCRIPTION	QTY	PART NUMBER
6' WAVE SLIDE	1	02-07-0028
MOUNTING BRACKET	1	02-07-0045
EXTENSION TUBE	1	02-07-0044
FOOTER PLATE	1	02-07-0046
CENTER SUPPORT POST	1	02-07-0063
1" FOOTER	1	02-07-0043
SLIDE HOOD	1	02-07-0025
HARDWARE COMPLETE	1	33-12-0073
M10 x 20mm (3/4") BHCS BOLT	7	33-11-0002*
M12 LOCKWASHER	9	33-11-0203*
M10 FLATWASHER	9	33-11-0200*
M10 x 35mm (1 3/8") BHCS BOLT	3	33-11-0005*
M10 LOCK NUT	3	33-11-0400*
M10 x 60mm (2 3/8") BHCS BOLT	2	33-11-0007*
M8 x 40mm (1 9/16") BHCS BOLT	2	33-11-0106*
M8 FLATWASHER	4	33-11-0300*
M8 LOCK NUT	6	33-11-0500*
M8 x 20mm (3/4") BHCS BOLT	2	33-11-0102*
M8 BARREL NUT	2	33-11-0501*
M8 x 25mm (1") BHCS BOLT	4	33-11-0103*
CLAMP RIVET	2	33-11-0700*

Unless Otherwise Specified, All Units of Measure are Each
Items listed below Hardware Complete line are included with Hardware Complete Number

Warning: During Installation, Hardware And Small Parts Are Choking Hazards For Young Children. Store Unused Parts Appropriately Until Assembly Is Completed. Once Assembly Is Completed, Remove Any Unused Parts From The Play Environment And Dispose/Save Them In A Secure Location. Any bolt end protruding more than two full threads beyond the face of the nut causes risk of clothing entanglement. Promptly cut-off flush, file smooth, and treat to prevent corrosion.

Note: Peen Tee-Nuts and Flatwashers to match radius of pipe after assembly is complete.
Note: Loctite (supplied by others) should be used on any non-patch hardware.

INSTALLATION INSTRUCTIONS:

IMPORTANT: DETERMINE WHICH MOUNTING OPTION YOU ARE USING; SURFACE MOUNT, ONGROUND, OR IN-GROUND.

1. Locate Slide and attach Mounting Bracket using M10 x 20mm B.H.C.S, M12 Lock Washer, and M10 Flat Washer. See Detail 057.

2. Attach Extension Tube to Mounting Bracket using M10 x 35mm B.H.C.S. and M10 Lock Nut. See Detail 014.

NOTE: DISCARD EXTENSION TUBE IF USING 2" POURED-IN-PLACE OR RUBBER TILE APPLICATIONS AND BOLT MOUNTING BRACKET DIRECTLY TO FOOTER PLATE.

3. Insert Footer Plate into Extension Tube and secure using M10 x 35mm B.H.C.S. and M10 Lock Nut. See Detail 036.

4. Attach Center Support Post to bottom side of Slide using M10 x 20mm B.H.C.S, M12 Lock Washer, and M10 Flat Washer. See Detail 062.

5. Attach Footer to Center Support Post using M10 x 35mm B.H.C.S. and M10 Lock Nut. See Detail 028.

6FT. WAVE SLIDE 02-07-5006

6. Clean out slots in Deck with utility knife if necessary.

7. Attach Slide to Deck using M10 x 20mm B.H.C.S, M12 Lock Washer, and M10 Flat Washer. See Detail 058.

8. Attach Slide Hood to Slide using M10 x 60mm B.H.C.S, M12 Lock Washer, and M10 Flat Washer. See Detail 059.

9. Attach Bottom of Slide Hood to Deck using M8 x 40mm B.H.C.S, M8 Flat Washer, and M8 Lock Nut. See Detail 060.

10. Attach Slide Hood to Panel Clamp using M8 x 20mm B.H.C.S. and M8 Barrel Nut. See Detail 061.

11. Close Panel Clamps around Uprights and secure using M8 x 25mm B.H.C.S. and M8 Lock Nut. See Detail 025. (Do not install Clamp Rivet until entire unit is assembled)

12. Plumb and level entire assembly before tightening all fasteners. NOTE: Apply Loctite to threads of Bolt to prevent from loosening.

MAINTENANCE PROCEDURE:

Periodically check hardware for tightness, and tighten as necessary. Always check all parts for breakage or wear, and immediately put equipment out of service until any faulty parts found are repaired or replaced. Also Check all metal parts for rust, paint loss and touch-up if necessary with paint. Check for welded areas and verify integrity. Check periodically resilient surfacing for appropriate depth and remove extraneous materials that could cause injury, infection, or disease. Maintain detailed installation, inspection, maintenance, and repair records for each public-use playground equipment.

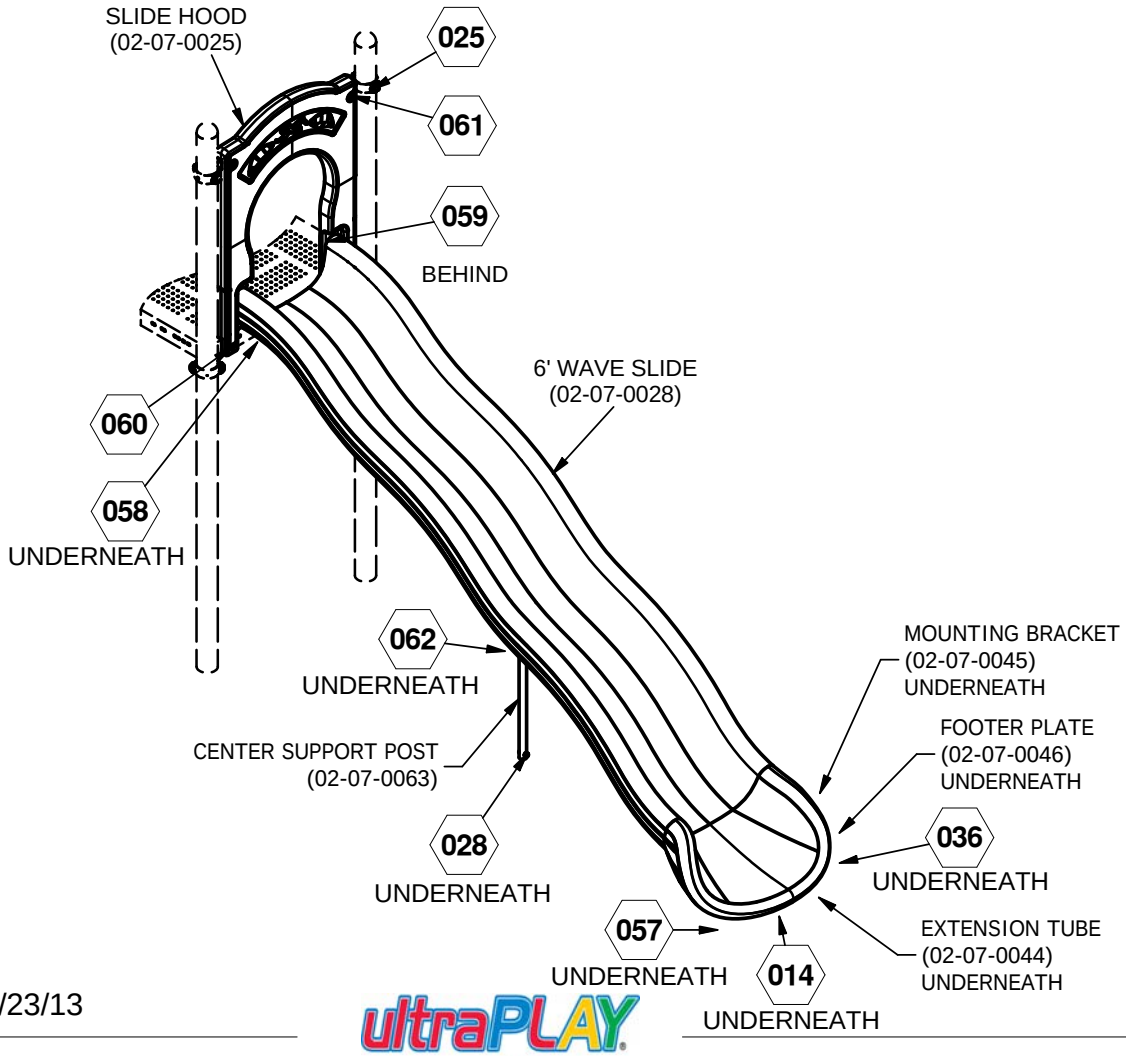

6FT. WAVE SLIDE 02-07-5006

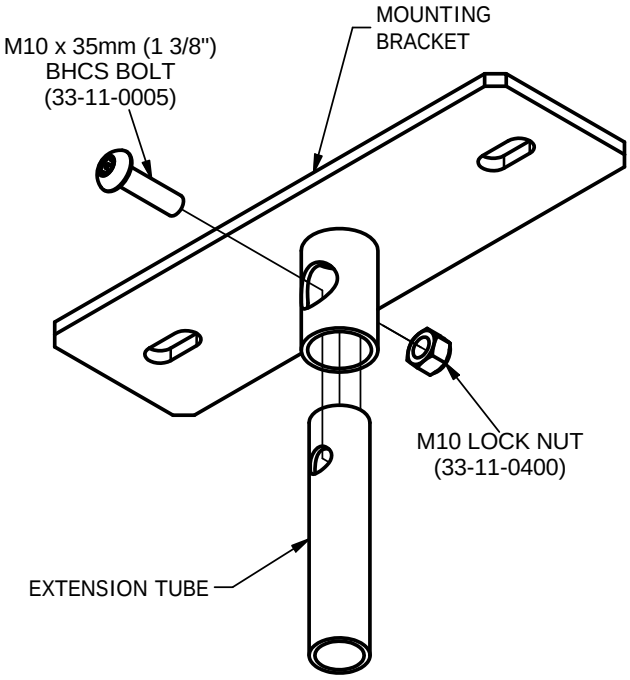

014

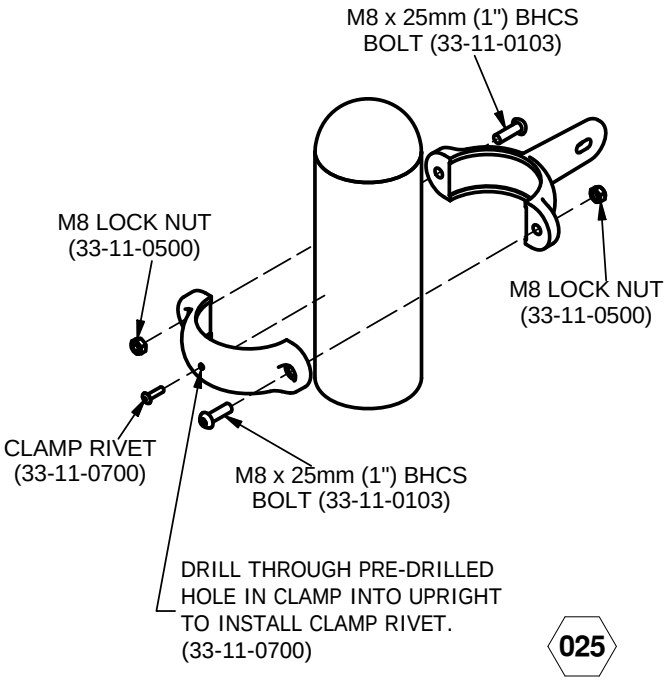

025

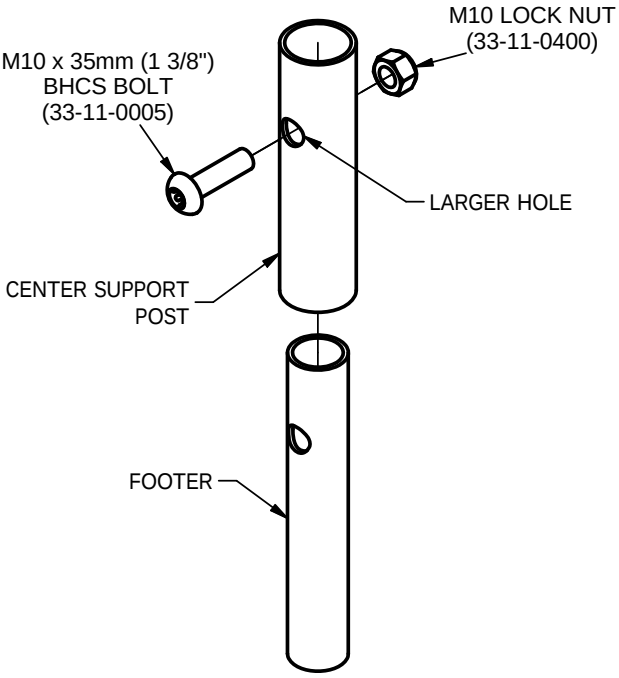

028

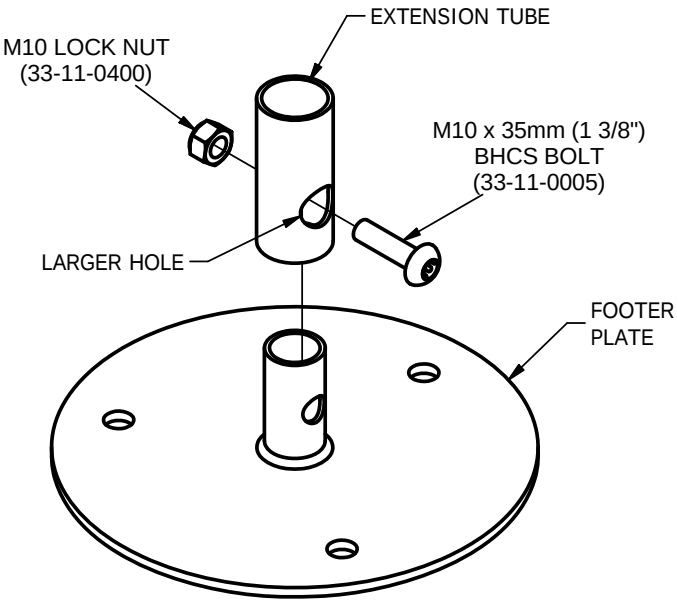

036

6FT. WAVE SLIDE 02-07-5006

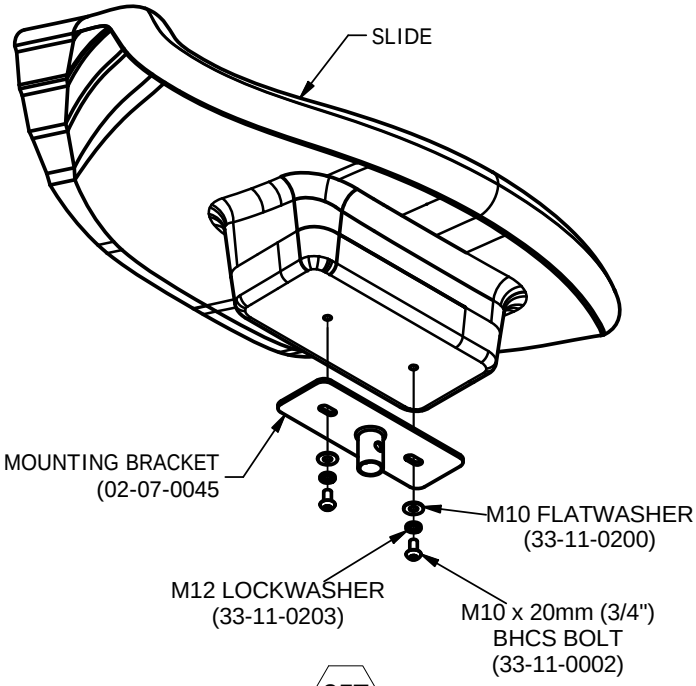

057

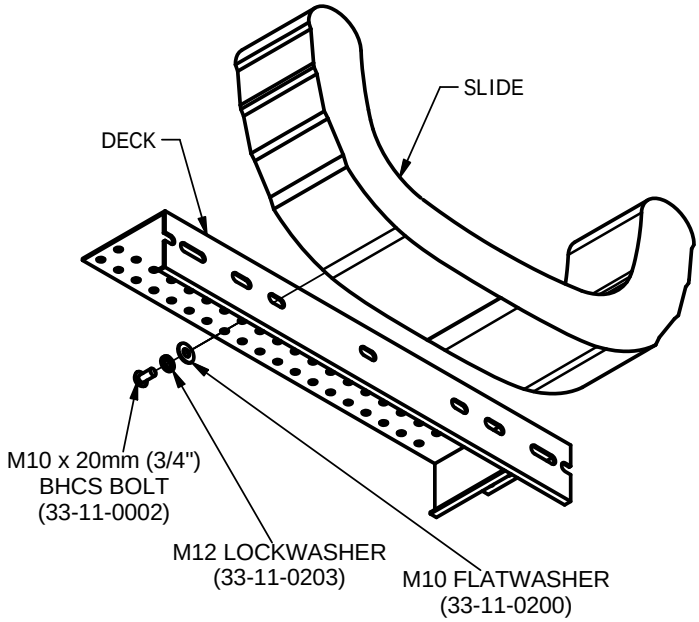

058

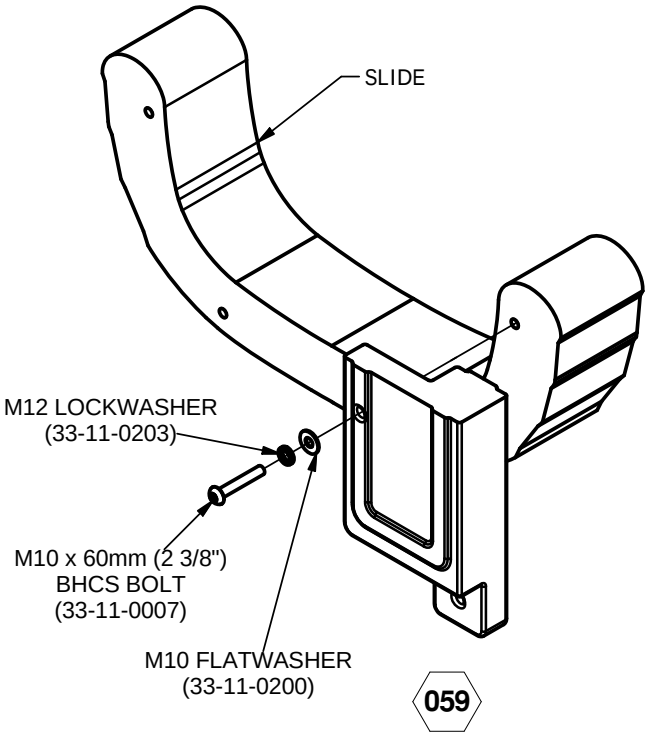

059

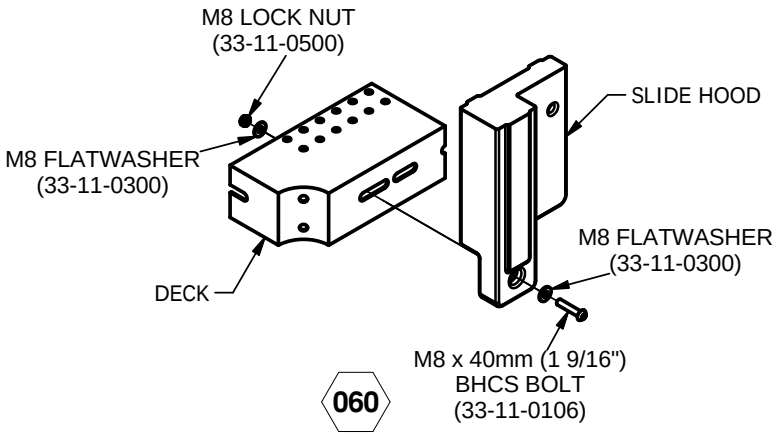

060

6FT. WAVE SLIDE 02-07-5006

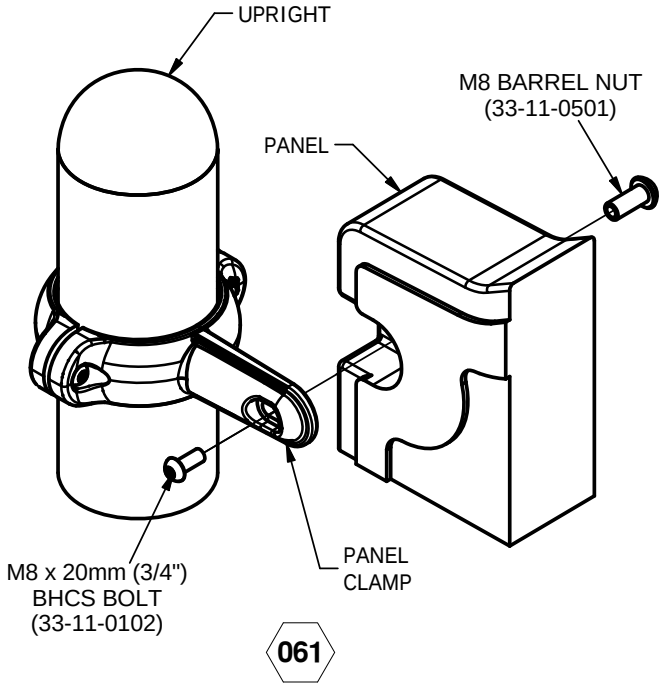

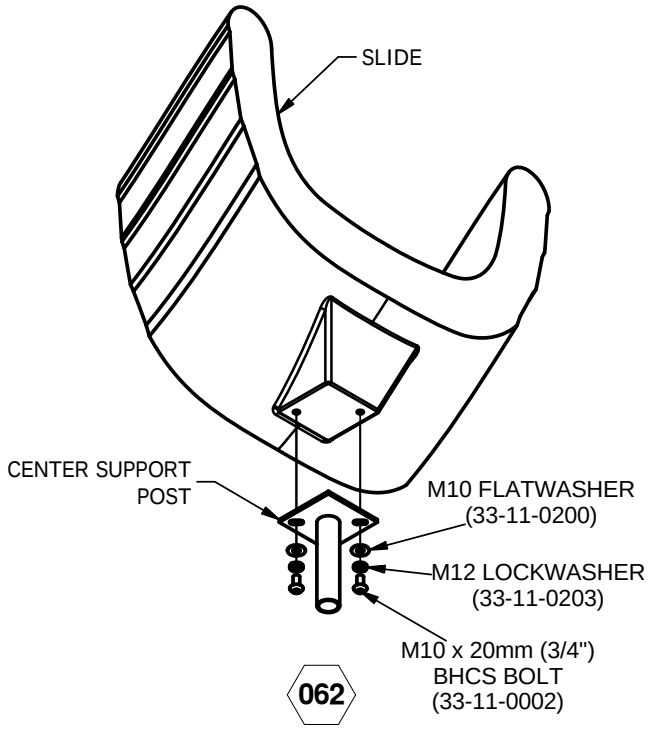

HDPE CLIMBER 02-07-5018

Parts List		
DESCRIPTION	QTY	PART NUMBER
HDPE CLIMBER	1	02-07-0029
GRAB BAR	2	02-07-0033
EXTENSION TUBE	2	02-07-0044
FOOTER PLATE	2	02-07-0046
TUBE CLAMP	4	02-07-0039
HARDWARE COMPLETE	1	33-12-0076
M10 x 25mm (1") BHCS BOLT	3	33-11-0003*
M10 FLATWASHER	6	33-11-0200*
M10 x 35mm (1 3/8") BHCS BOLT	4	33-11-0005*
M10 LOCK NUT	7	33-11-0400*
M8 LOCKWASHER	4	33-11-0301*
M8 LOCK NUT	8	33-11-0500*
CLAMP RIVET	4	33-11-0700*
M8 x 25mm (1") BHCS BOLT	12	33-11-0103*

Unless Otherwise Specified, All Units of Measure are Each
Items listed below Hardware Complete line are included with Hardware Complete Number

Warning: During Installation, Hardware And Small Parts Are Choking Hazards For Young Children. Store Unused Parts Appropriately Until Assembly Is Completed. Once Assembly Is Completed, Remove Any Unused Parts From The Play Environment And Dispose/Save Them In A Secure Location. Any bolt end protruding more than two full threads beyond the face of the nut causes risk of clothing entanglement. Promptly cut-off flush, file smooth, and treat to prevent corrosion.

Note: Peen Tee-Nuts and Flatwashers to match radius of pipe after assembly is complete.
Note: Loctite (supplied by others) should be used on any non-patch hardware.

INSTALLATION INSTRUCTIONS:

IMPORTANT: DETERMINE WHICH MOUNTING OPTION YOU ARE USING; SURFACE MOUNT, ONGROUND, OR IN-GROUND.

1. Choose the appropriate Deck to receive HDPE Climber.

2. Trim out all slots in Deck with utility knife if necessary.

3. Attach Extension Tube to Footer Plate using M10 x 35mm B.H.C.S. Bolt and M10 Lock Nut. See Detail 036.

4. Insert Extension Tube into shaft of HDPE Climber and secure with M10 x 35mm B.H.C.S. Bolt and M10 Lock Nut. See Detail 043.

NOTE: IF 2" SURFACING IS USED; ELIMINATE EXTENSION TUBE, AND BOLT HDPE CLIMBER DIRECTLY TO FOOTER PLATE.

5. Attach HDPE Climber to Deck using M10 x 25mm B.H.C.S. Bolt, M10 Flat Washer, and M10 Lock Nut. See Detail 031.

6. Insert shaft of Tube Clamp onto Grab Bar and secure using M8 x 25mm B.H.C.S. Bolt and M8 Lock Washer. See Detail 029.

NOTE: THE VERTICAL POSITION OF THE GRAB BARS MUST BE A MINIMUM OF 38" ABOVE THE DECK. THE CLAMP POSITION CAN BE ADJUSTED HIGHER TO AVOID INTERFERENCE WITH OTHER CLAMPS.

7. Attach Tube Clamp to Upright using M8 x 25mm B.H.C.S. Bolt and M8 Lock Nut. Once all clamps are installed and secured, drill Ø1/4" hole through Clamp and Upright to install Clamp Rivet. See Detail 030. (Do not install Clamp Rivet until entire unit is assembled.)

8. Plumb and level entire assembly before tightening all fasteners. NOTE: Apply Loctite to threads of Bolt to prevent from loosening.

HDPE CLIMBER 02-07-5018

MAINTENANCE PROCEDURE:

Periodically check hardware for tightness, and tighten as necessary. Always check all parts for breakage or wear, and immediately put equipment out of service until any faulty parts found are repaired or replaced. Also Check all metal parts for rust, paint loss and touch-up if necessary with paint. Check for welded areas and verify integrity. Check periodically resilient surfacing for appropriate depth and remove extraneous materials that could cause injury, infection, or disease. Maintain detailed installation, inspection, maintenance, and repair records for each public-use playground equipment.

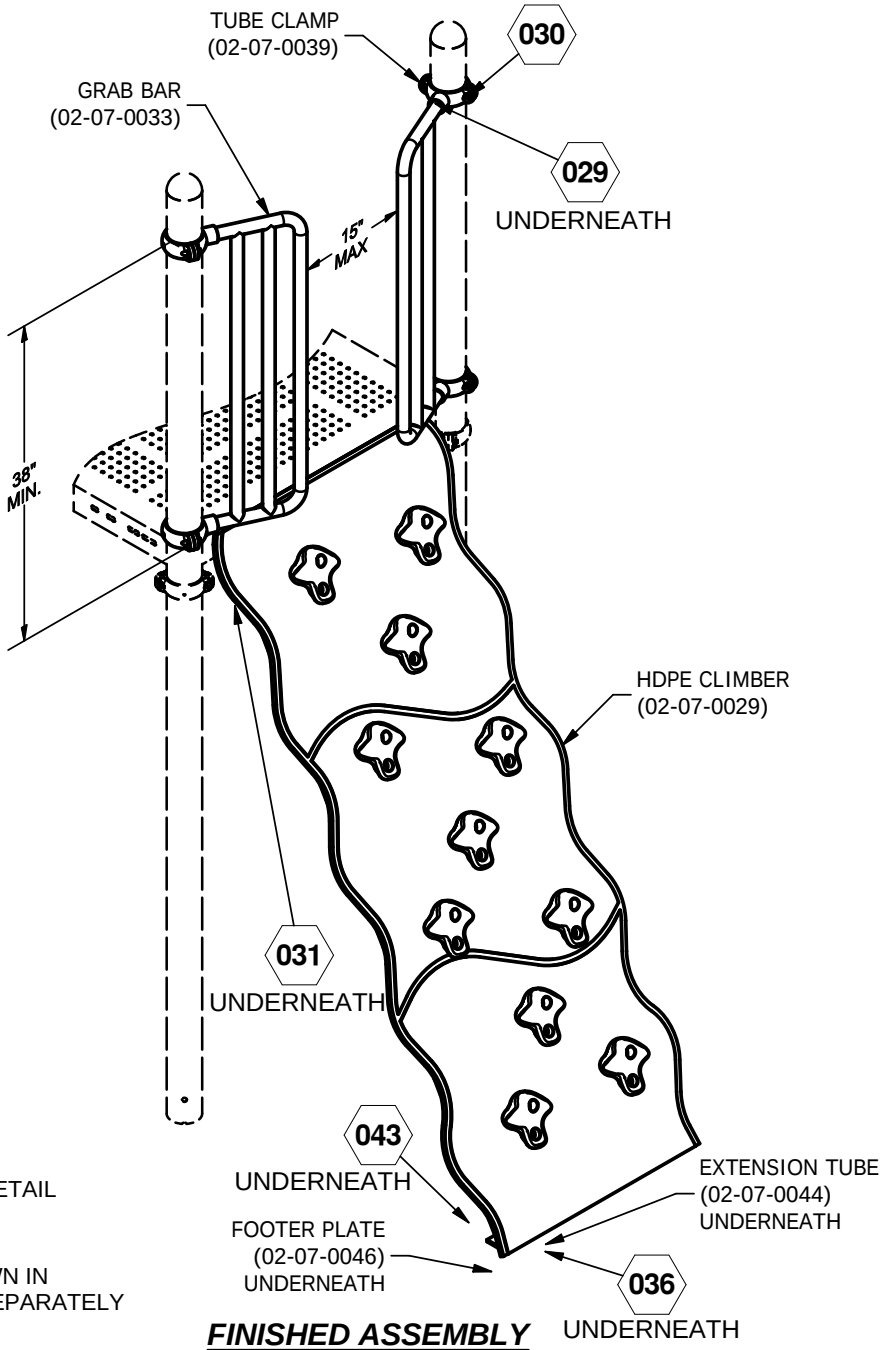

= INSTALLATION DETAIL

COMPONENTS SHOWN IN
HIDDEN LINES ARE SOLD SEPARATELY

FINISHED ASSEMBLY

Issued/Revised: 04/30/13

HDPE CLIMBER 02-07-5018

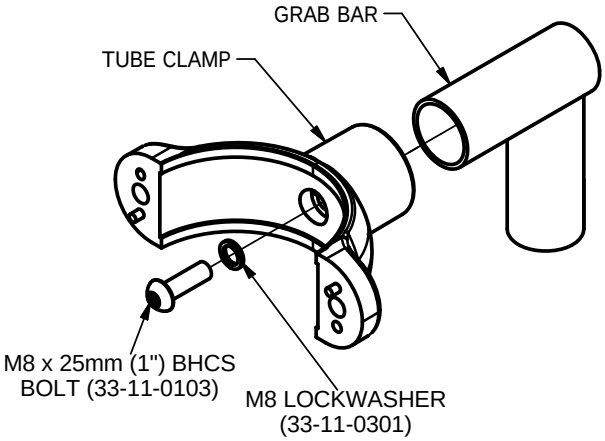

029

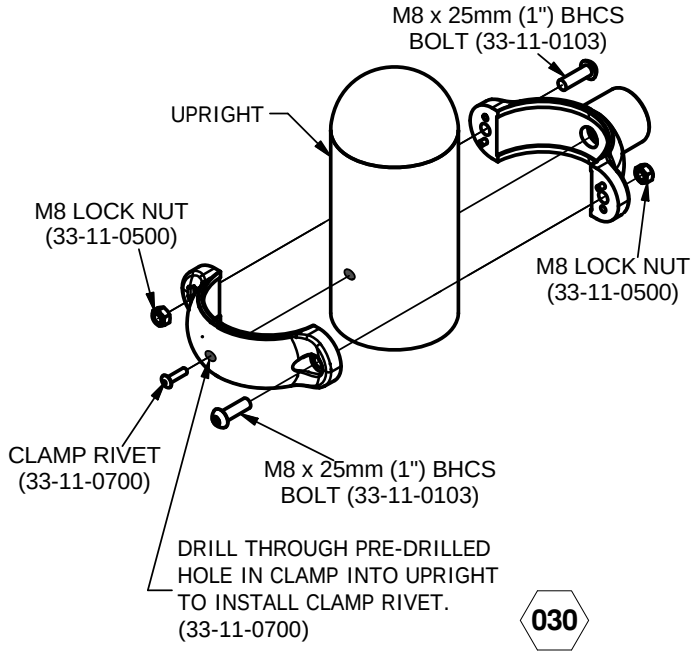

030

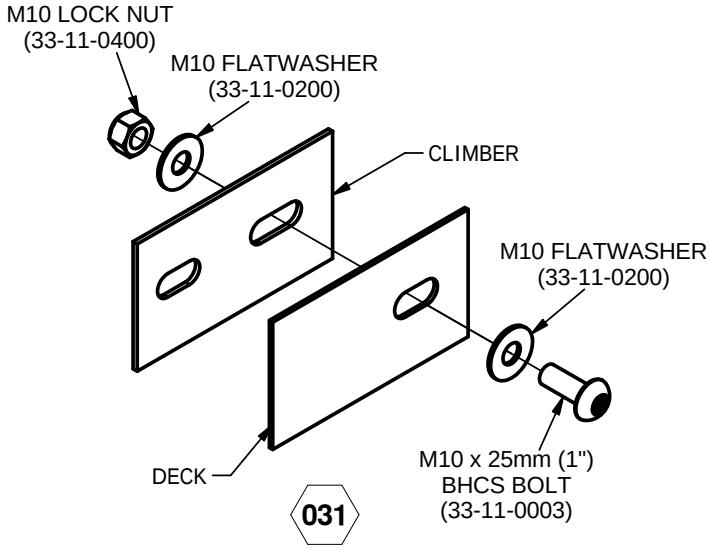

031

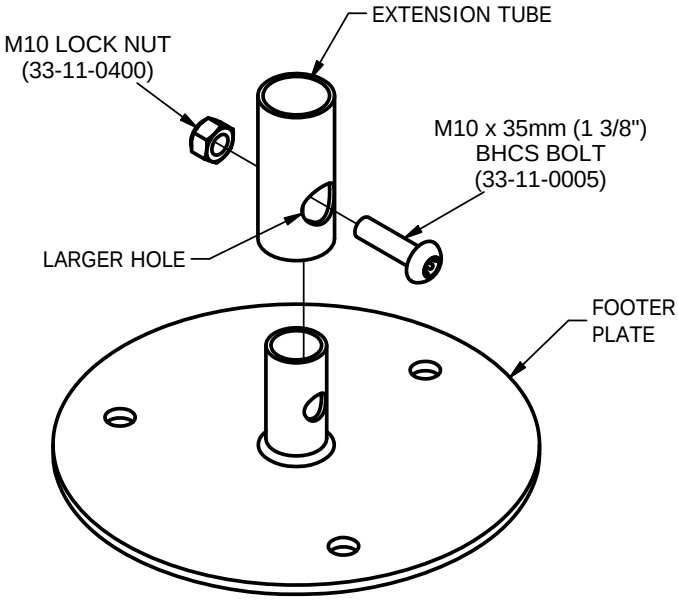

036

HDPE CLIMBER 02-07-5018

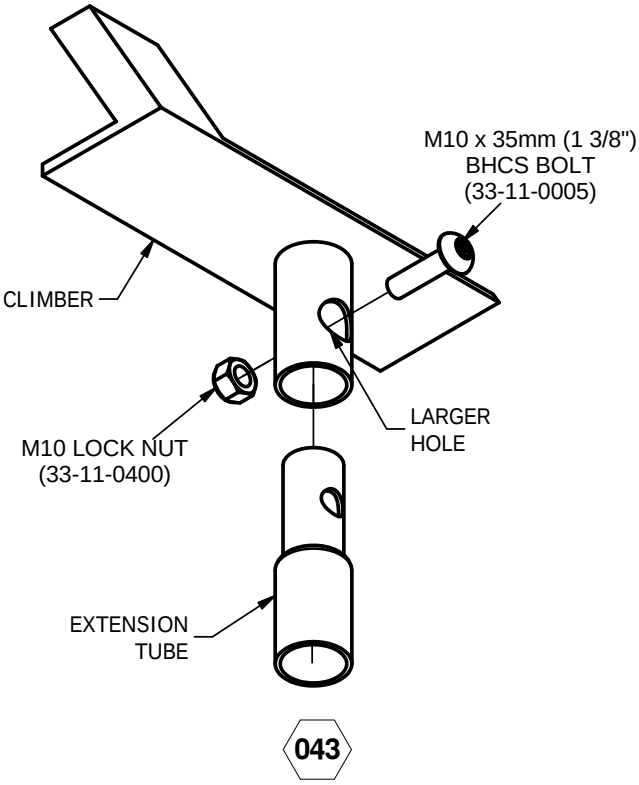

ROOF 02-07-5015

Parts List		
DESCRIPTION	QTY	PART NUMBER
ROOF	1	02-07-0037
HARDWARE COMPLETE	1	33-12-0036
M5 x 76mm (3") SELF-TAPPING SCREW	4	33-11-0600*

Unless Otherwise Specified, All Units of Measure are Each
Items listed below Hardware Complete line are included with Hardware Complete Number

Warning: During Installation, Hardware And Small Parts Are Choking Hazards For Young Children. Store Unused Parts Appropriately Until Assembly Is Completed. Once Assembly Is Completed, Remove Any Unused Parts From The Play Environment And Dispose/Save Them In A Secure Location. Any bolt end protruding more than two full threads beyond the face of the nut causes risk of clothing entanglement. Promptly cut-off flush, file smooth, and treat to prevent corrosion.

Note: Peen Tee-Nuts and Flatwashers to match radius of pipe after assembly is complete.
Note: Loctite (supplied by others) should be used on any non-patch hardware.

INSTALLATION INSTRUCTIONS:

1. Choose the appropriate Uprights to receive Roof.

2. Attach Roof to Uprights using M5 x 76mm Self Tapping Screw. See Detail 037.

3. Plumb and level entire assembly before tightening all fasteners. NOTE: Apply Loctite to threads of Bolt to prevent from loosening.

MAINTENANCE PROCEDURE:

Periodically check hardware for tightness, and tighten as necessary. Always check all parts for breakage or wear, and immediately put equipment out of service until any faulty parts found are repaired or replaced. Also Check all metal parts for rust, paint loss and touch-up if necessary with paint. Check for welded areas and verify integrity. Check periodically resilient surfacing for appropriate depth and remove extraneous materials that could cause injury, infection, or disease. Maintain detailed installation, inspection, maintenance, and repair records for each public-use playground equipment.

ROOF 02-07-5015

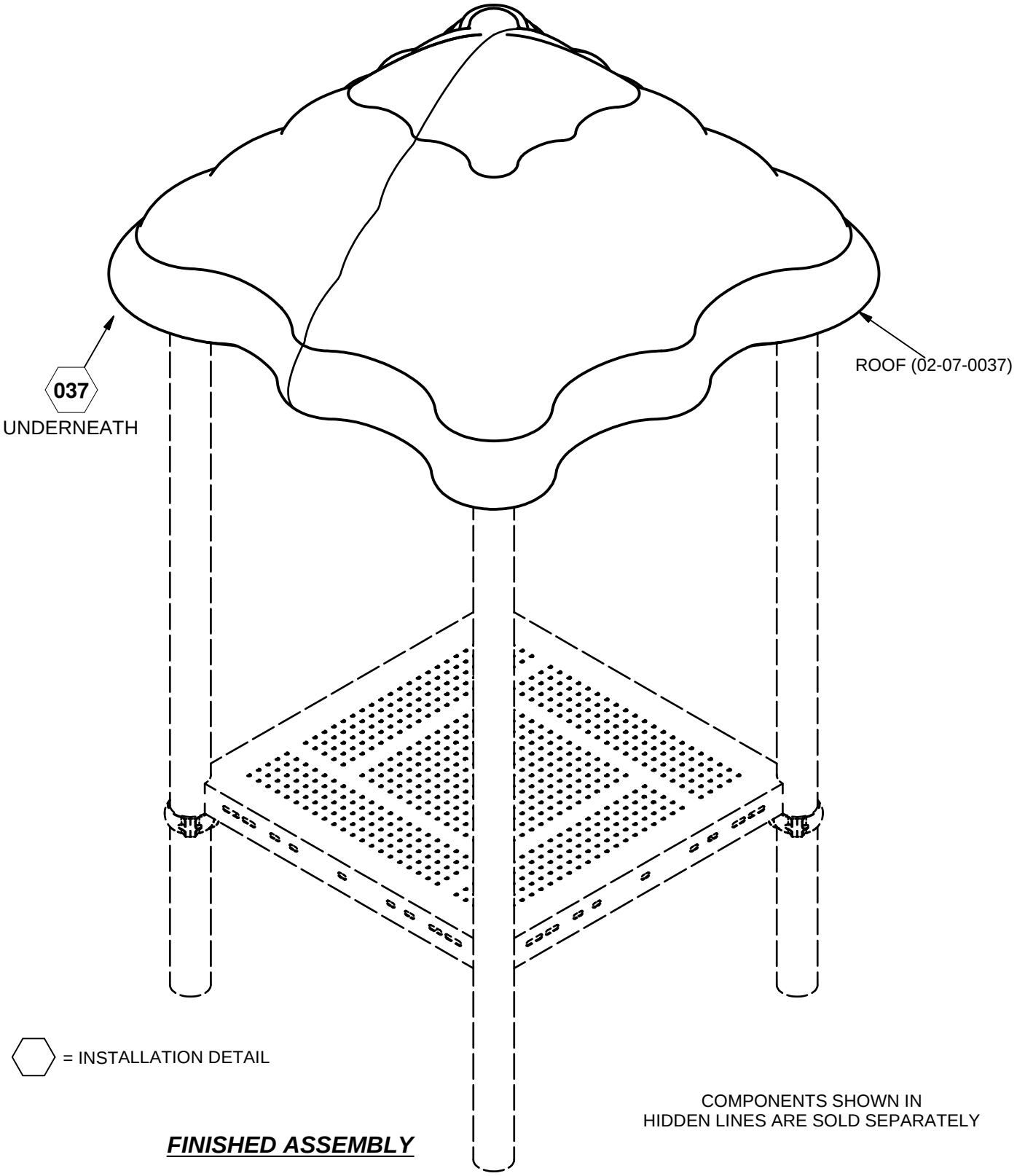

FINISHED ASSEMBLY

ROOF 02-07-5015

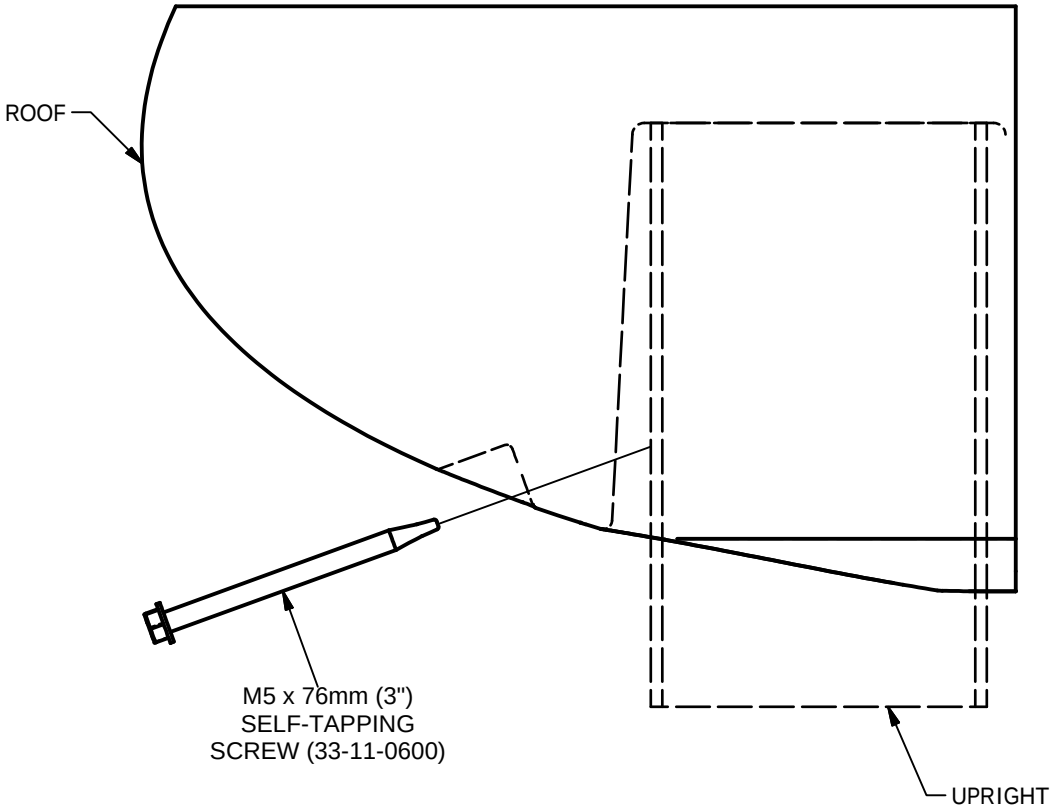

037

ENGINEERING REVISIONS -for-

02-07-5022

A	BLT	REMOVED HARDWARE AND UPDATED INSTRUCTIONS TO REFLECT ASSEMBLED RAINWHEEL	10 06 15

RAIN WHEEL w/TUBE CLAMP 02-07-5022

Parts List		
DESCRIPTION	QTY	PART NUMBER
RAIN WHEEL ASS'Y	1	02-07-0012

Unless Otherwise Specified, All Units of Measure are Each
Items listed below Hardware Complete line are included with Hardware Complete Number

Warning: During Installation, Hardware And Small Parts Are Choking Hazards For Young Children. Store Unused Parts Appropriately Until Assembly Is Completed. Once Assembly Is Completed, Remove Any Unused Parts From The Play Environment And Dispose/Save Them In A Secure Location. Any bolt end protruding more than two full threads beyond the face of the nut causes risk of clothing entanglement. Promptly cut-off flush, file smooth, and treat to prevent corrosion.

Note: Peen Tee-Nuts and Flatwashers to match radius of pipe after assembly is complete.
Note: Loctite (supplied by others) should be used on any non-patch hardware.

INSTALLATION INSTRUCTIONS:

1. Attach Rain Wheel Assembly to Upright using M8 x 25mm B.H.C.S. Bolt and M8 Lock Nut. See Detail 030. (Do not install Clamp Rivet until entire unit is assembled.)

NOTE: MOUNT THE TOP EDGE OF TUBE CLAMP 34" VERTICALLY FROM BOTTOM OF PAINTED UPRIGHT

2. Plumb and level entire assembly before tightening all fasteners. NOTE: Apply Loctite to threads of Bolts to prevent from loosening.

IMPORTANT: ROUTINE MAINTENANCE MAY BE REQUIRED. IF RAIN WHEEL BECOMES LOOSE APPLY LOCTITE (SUPPLIED BY OTHERS) TO BOLT AS NOTED IN RAIN WHEEL ASS'Y DIAGRAM.

MAINTENANCE PROCEDURE:

Periodically check hardware for tightness, and tighten as necessary. Always check all parts for breakage or wear, and immediately put equipment out of service until any faulty parts found are repaired or replaced. Also Check all metal parts for rust, paint loss and touch-up if necessary with paint. Check for welded areas and verify integrity. Check periodically resilient surfacing for appropriate depth and remove extraneous materials that could cause injury, infection, or disease. Maintain detailed installation, inspection, maintenance, and repair records for each public-use playground equipment.

RAIN WHEEL w/TUBE CLAMP 02-07-5022

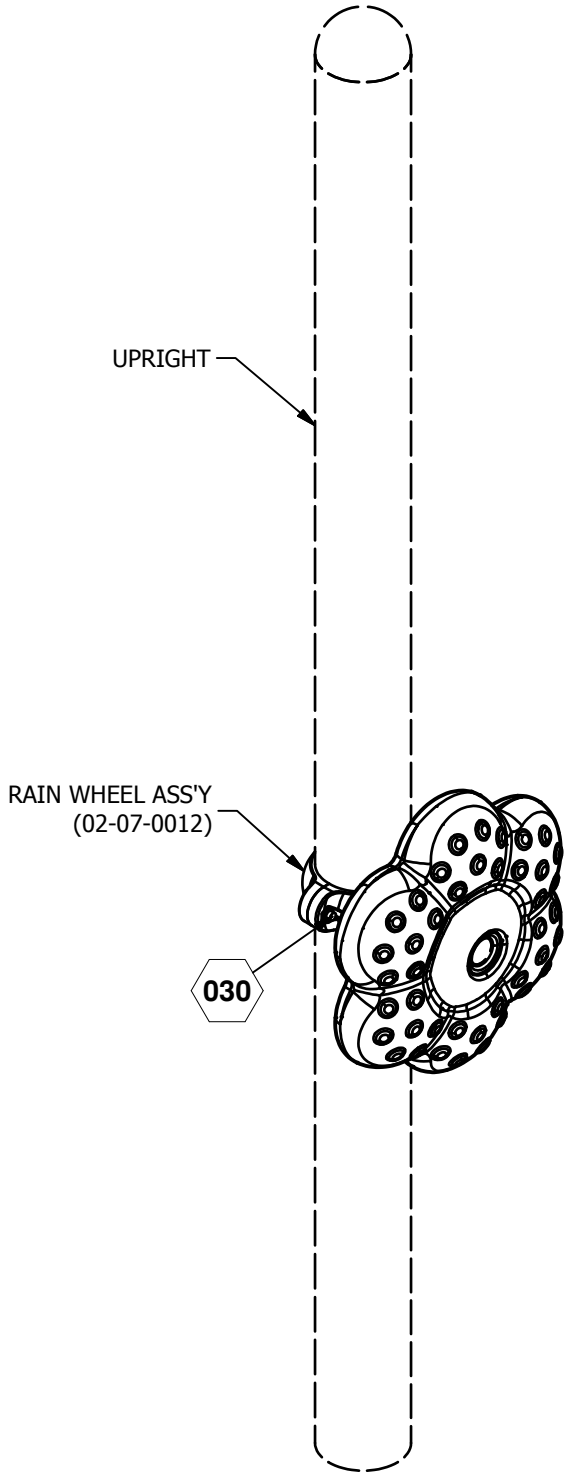

= INSTALLATION DETAIL

FINISHED ASSEMBLY

COMPONENTS SHOWN IN
HIDDEN LINES ARE SOLD SEPARATELY

Issued/Revised: 10/06/15

RAIN WHEEL w/TUBE CLAMP 02-07-5022

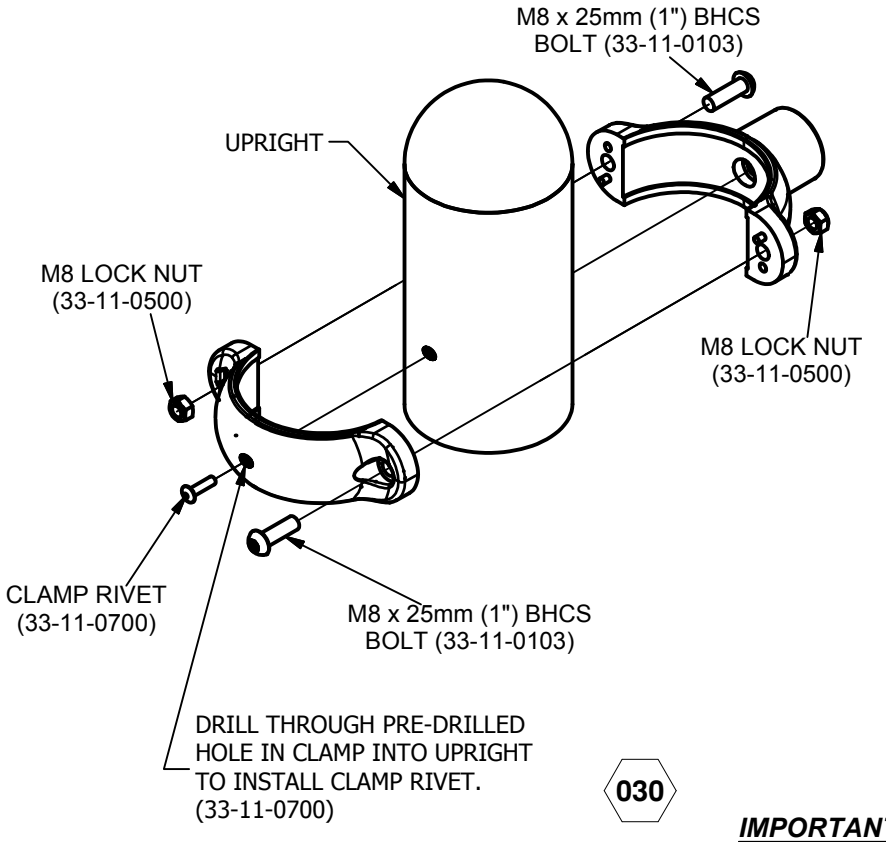

030

IMPORTANT:
*LOCTITE (SUPPLIED BY OTHERS)
SHOULD BE APPLIED TO THIS BOLT

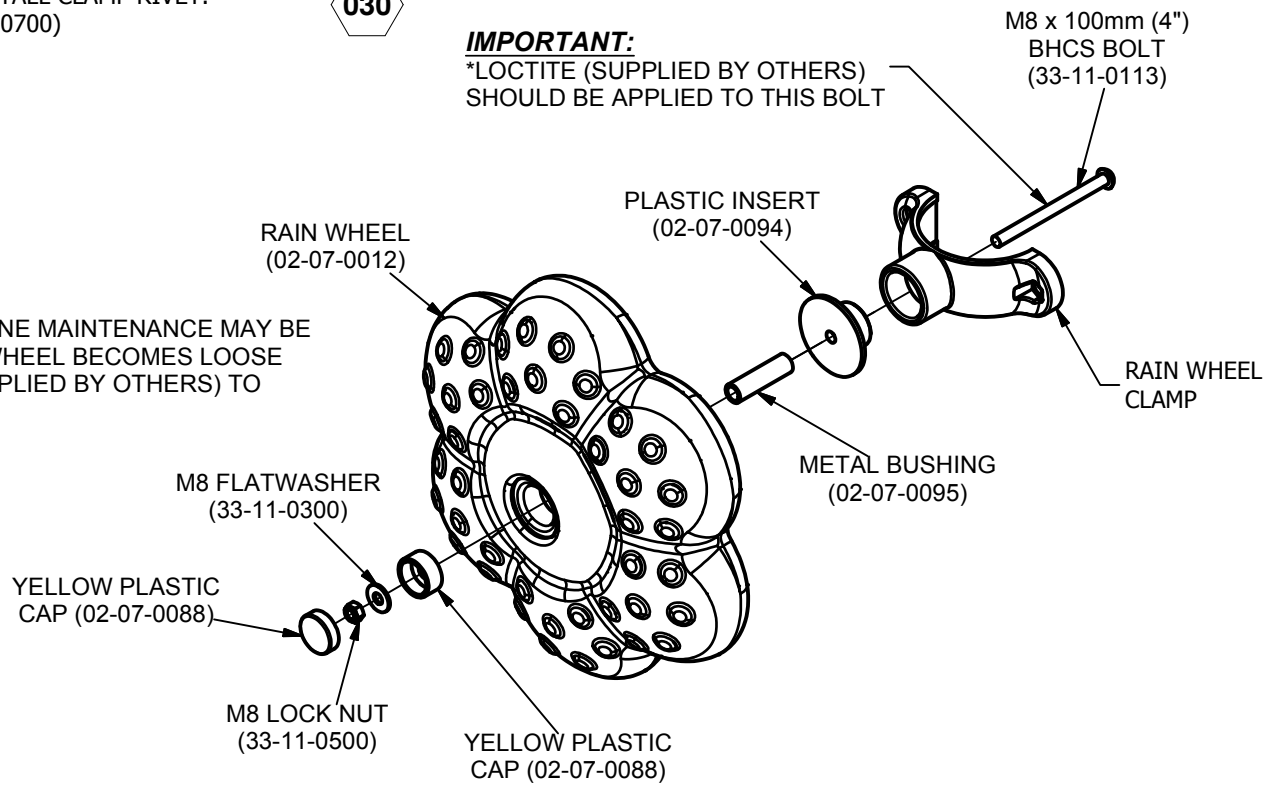

IMPORTANT: ROUTINE MAINTENANCE MAY BE REQUIRED. IF RAIN WHEEL BECOMES LOOSE APPLY LOCTITE (SUPPLIED BY OTHERS) TO BOLT AS NOTED.

RAINWHEEL ASS'Y DIAGRAM

Issued/Revised: 10/06/15

BASS DRUM w/TUBE CLAMP 02-07-5023

Parts List		
DESCRIPTION	QTY	PART NUMBER
BASS DRUM BRACKET	1	02-07-0091
TUBE CLAMP	2	02-07-0039
BASS DRUM	1	02-07-0013
HARDWARE COMPLETE	1	33-12-0021
M8 x 25mm (1") BHCS BOLT	6	33-11-0103*
M8 LOCKWASHER	2	33-11-0301*
M8 LOCK NUT	7	33-11-0500*
M8 x 20mm (3/4") BHCS BOLT	3	33-11-0102*
M8 FLATWASHER	6	33-11-0300*
CLAMP RIVET	2	33-11-0700*

Unless Otherwise Specified, All Units of Measure are Each
Items listed below Hardware Complete line are included with Hardware Complete Number

Warning: During Installation, Hardware And Small Parts Are Choking Hazards For Young Children. Store Unused Parts Appropriately Until Assembly Is Completed. Once Assembly Is Completed, Remove Any Unused Parts From The Play Environment And Dispose/Save Them In A Secure Location. Any bolt end protruding more than two full threads beyond the face of the nut causes risk of clothing entanglement. Promptly cut-off flush, file smooth, and treat to prevent corrosion.

Note: Peen Tee-Nuts and Flatwashers to match radius of pipe after assembly is complete.
Note: Loctite (supplied by others) should be used on any non-patch hardware.

INSTALLATION INSTRUCTIONS:

1. Choose the appropriate Upright to receive Bass Drum.

2. Insert Bass Drum Bracket into Tube Clamp and secure using M8 x 25mm B.H.C.S. Bolt and M8 Lock Washer. See Detail 029.

3. Attach Tube Clamp to Upright using M8 x 25mm B.H.C.S. Bolt and M8 Lock Nut. See Detail 030. (Do not install Clamp Rivet until entire unit is assemblied.)

4. Attach Bass Drum to Bass Drum Bracket using M8 x 20mm B.H.C.S. Bolt, M8 Flat Washer, and M8 Lock Nut. See Detail 053.

NOTE: PLACE TOP EDGE OF TOP CLAMP 26" FROM BOTTOM OF PAINTED UPRIGHT.

5. Plumb and level entire assembly before tightening all fasteners. Note: Apply Loctite to threads of Bolt to prevent from loosening.

MAINTENANCE PROCEDURE:

Periodically check hardware for tightness, and tighten as necessary. Always check all parts for breakage or wear, and immediately put equipment out of service until any faulty parts found are repaired or replaced. Also Check all metal parts for rust, paint loss and touch-up if necessary with paint. Check for welded areas and verify integrity. Check periodically resilient surfacing for appropriate depth and remove extraneous materials that could cause injury, infection, or disease. Maintain detailed installation, inspection, maintenance, and repair records for each public-use playground equipment.

BASS DRUM w/TUBE CLAMP 02-07-5023

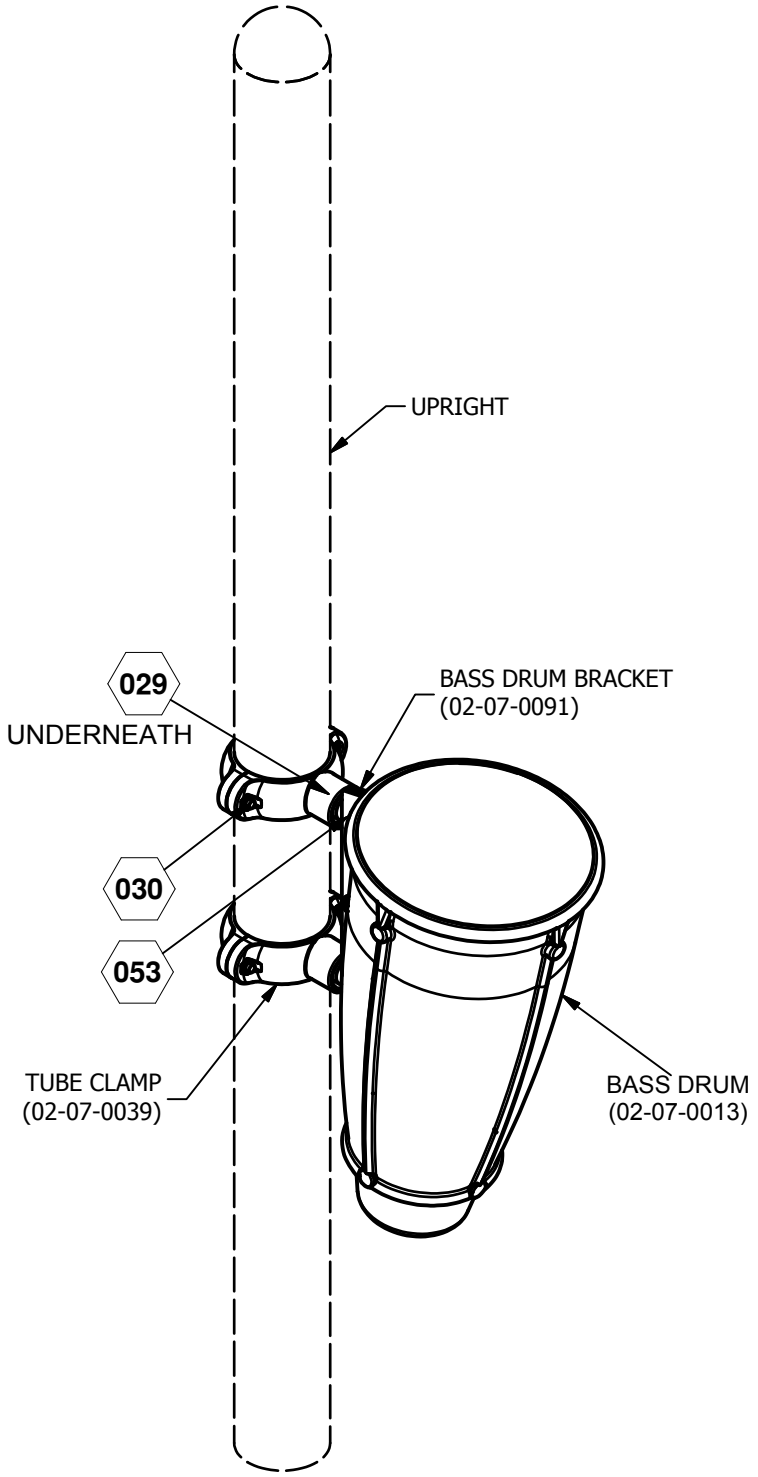

= INSTALLATION DETAIL

FINISHED ASSEMBLY

COMPONENTS SHOWN IN
HIDDEN LINES ARE SOLD SEPARATELY

BASS DRUM w/TUBE CLAMP 02-07-5023

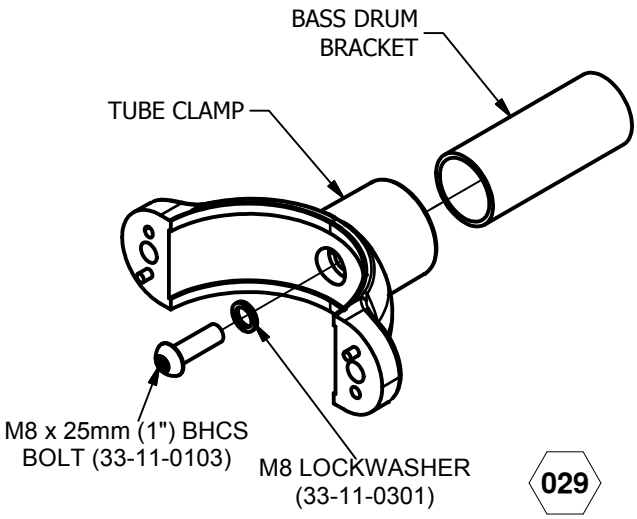

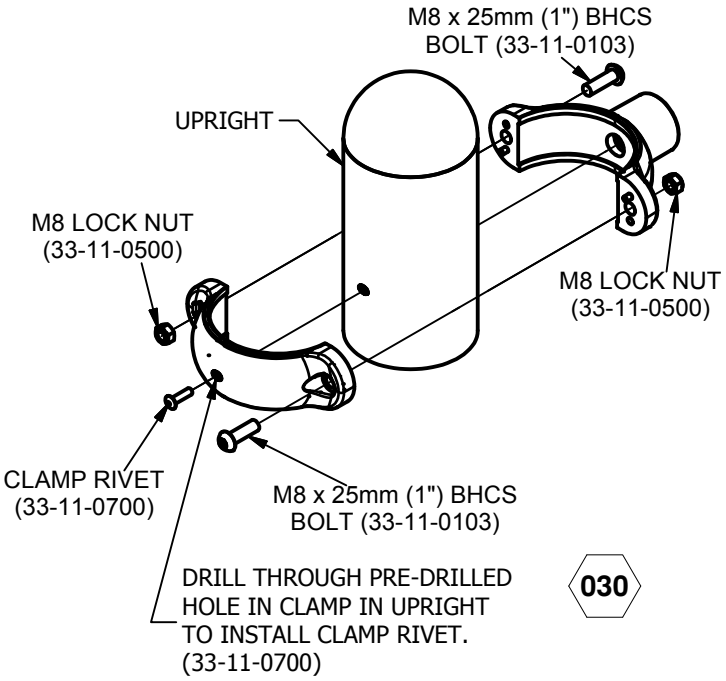

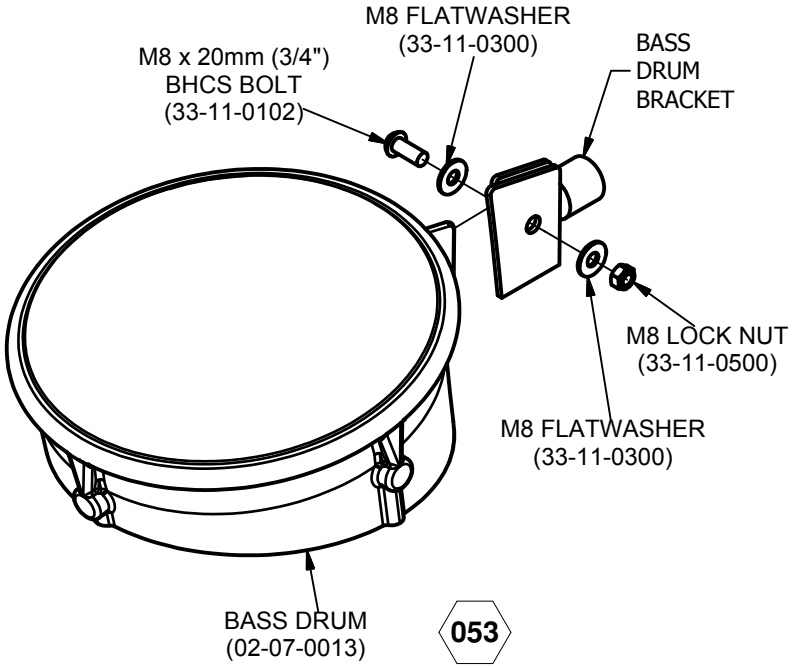

BONGO DRUMS 02-07-5024

Parts List		
DESCRIPTION	QTY	PART NUMBER
BONGO DRUMS BRACKET	1	02-07-0092
BONGO DRUMS TUBE CLAMP	1	02-07-0056
MOUNTING BAR	1	02-07-0093
BONGO DRUMS	1	02-07-0014
HARDWARE COMPLETE	1	33-12-0020
M8 x 25mm (1") BHCS BOLT	4	33-11-0103*
M8 BARREL NUT	1	33-11-0501*
M8 x 20mm (3/4") BHCS BOLT	2	33-11-0102*
M8 FLATWASHER	6	33-11-0300*
M8 LOCK NUT	5	33-11-0500*
M10 LOCKWASHER	3	33-11-0201*
CLAMP RIVET	1	33-11-0700*

Unless Otherwise Specified, All Units of Measure are Each
Items listed below Hardware Complete line are included with Hardware Complete Number

Warning: During Installation, Hardware And Small Parts Are Choking Hazards For Young Children. Store Unused Parts Appropriately Until Assembly Is Completed. Once Assembly Is Completed, Remove Any Unused Parts From The Play Environment And Dispose/Save Them In A Secure Location. Any bolt end protruding more than two full threads beyond the face of the nut causes risk of clothing entanglement. Promptly cut-off flush, file smooth, and treat to prevent corrosion.

Note: Peen Tee-Nuts and Flatwashers to match radius of pipe after assembly is complete.
Note: Loctite (supplied by others) should be used on any non-patch hardware.

INSTALLATION INSTRUCTIONS:

1. Choose the appropriate Upright to receive Bongo Drums.

2. Insert Bongo Drums Bracket into Bongo Drums Tube Clamp and secure using M8 x 25mm B.H.C.S. Bolt and M8 Barrel Nut. See Detail 054.

3. Attach Bongo Drums to Bongo Drums Bracket using Mounting Bar, M8 x 20mm B.H.C.S. Bolt, M10 Lock Washer, M8 Flat Washer, and M8 Lock Nut. From underside of Bongo Drums attach Bongo Drums Bracket using M8 x 25mm B.H.C.S. Bolt, M10 Lock Washer, M8 Flat Washer, and M8 Lock Nut. See Detail 003.

4. Attach Bongo Drums Tube Clamp to Upright using M8 x 25mm B.H.C.S. Bolt and M8 Lock Nut. See Detail 030. (Do not install Clamp Rivet until entire unit is assembled)

NOTE: PLACE TOP EDGE OF BONGO DRUMS CLAMP 28" FROM BOTTOM OF PAINTED UPRIGHT.

5. Plumb and level entire assembly before tightening all fasteners. Note: Apply Loctite to threads of Bolt to prevent from loosening.

MAINTENANCE PROCEDURE:

Periodically check hardware for tightness, and tighten as necessary. Always check all parts for breakage or wear, and immediately put equipment out of service until any faulty parts found are repaired or replaced. Also Check all metal parts for rust, paint loss and touch-up if necessary with paint. Check for welded areas and verify integrity. Check periodically resilient surfacing for appropriate depth and remove extraneous materials that could cause injury, infection, or disease. Maintain detailed installation, inspection, maintenance, and repair records for each public-use playground equipment.

BONGO DRUMS 02-07-5024

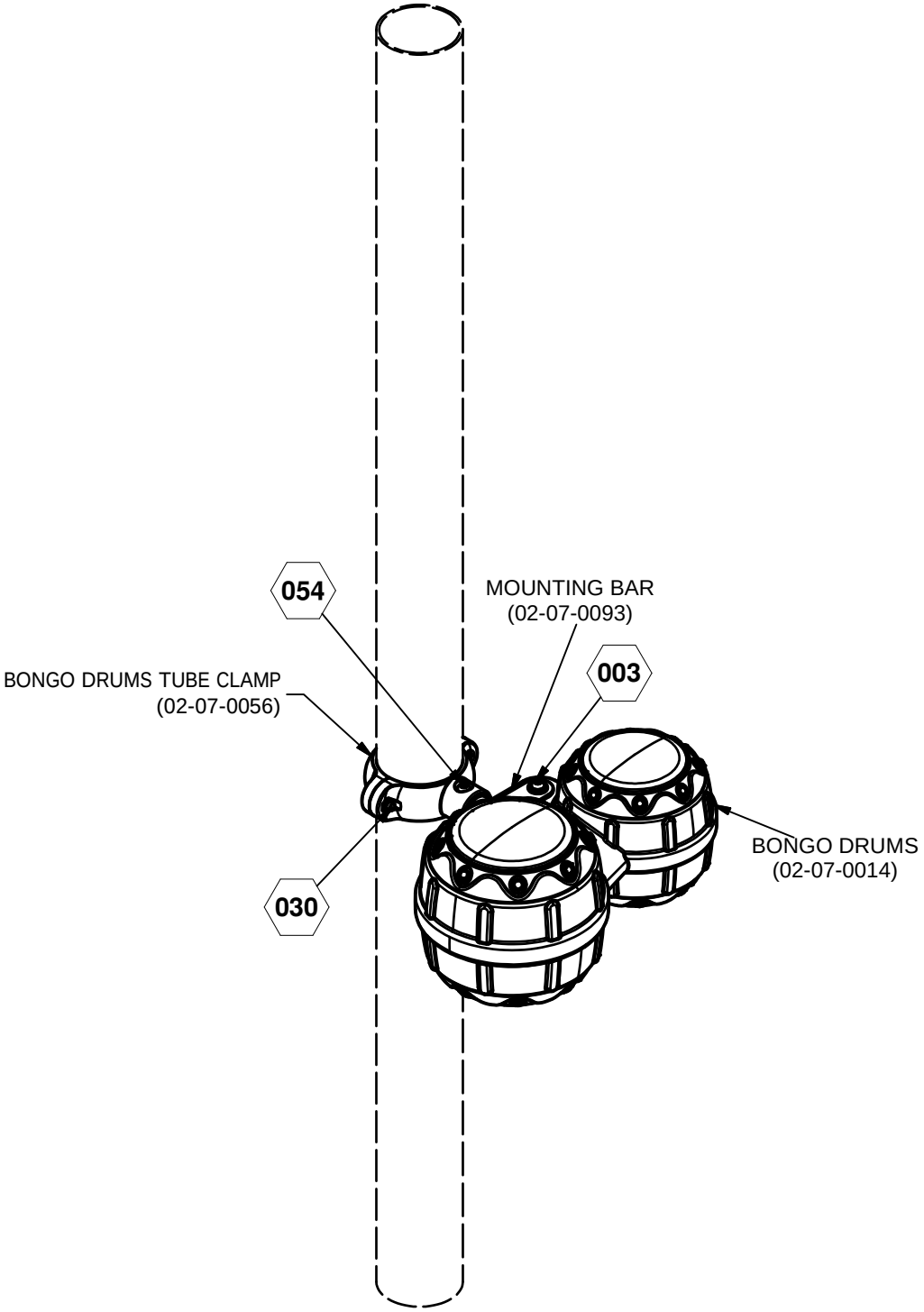

= INSTALLATION DETAIL

FINISHED ASSEMBLY

COMPONENTS SHOWN IN
HIDDEN LINES ARE SOLD SEPARATELY

Issued/Revised: 05/08/13
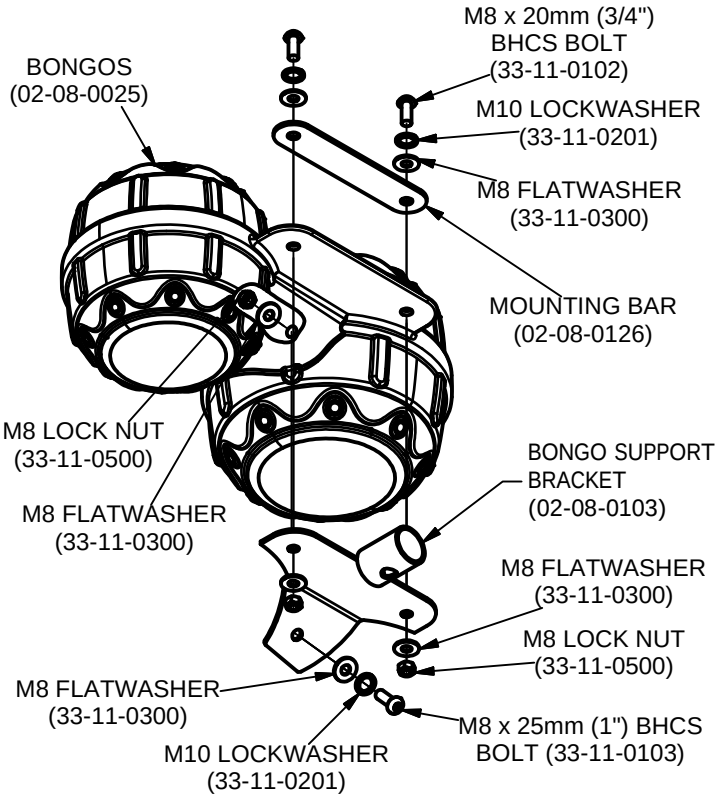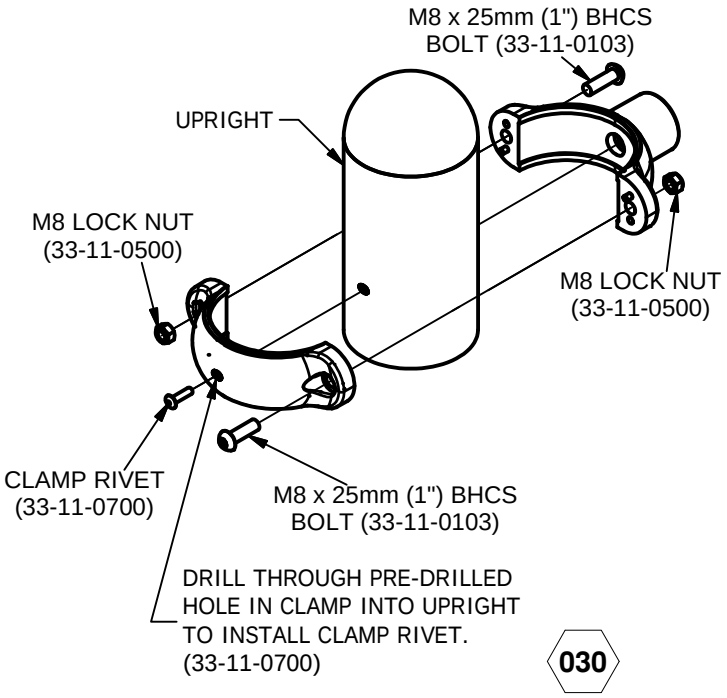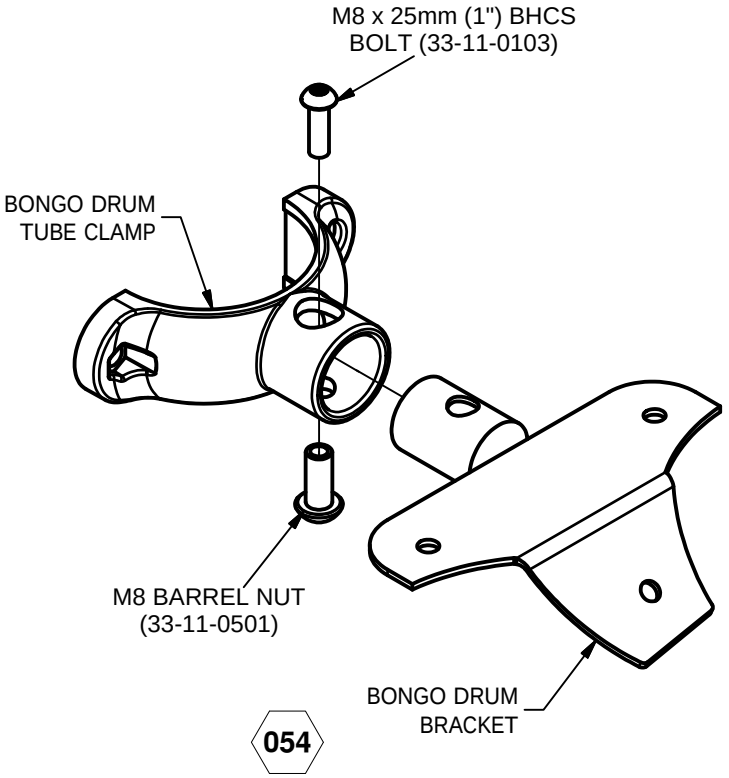
BONGO DRUMS 02-07-5024